Technical Catalogue 2019

Dear Ladies and Gentlemen,

Please accept our Technical Catalogue for fire ventilation systems, which contains detailed information on the use, design, versions, manufacture and equipment, methods of installation and technical parameters of our fire dampers and valves.

Every appliance dispatched from „MERCOR" S.A. factories to a Customer is thoroughly verified in accordance with the highest quality management standards and subject to a range of approval tests. We are proud to provide safety through our operations.

We are looking forward to doing business with you.

The „MERCOR" S.A. Team

The electronic version of our Technical Catalogue is available at www.mercor.com.pl

mercor®

FIRE VENTILATION SYSTEMS

Fire ventilation systems

Technical Catalogue 2019

Edited by: „MERCOR" S.A. - Fire Ventilation Systems Department

„MERCOR" S.A. seated in Gdańsk reserves the right to introduce any changes to the content of this Technical Catalogue 2019 at any time and without giving any reasons. The introduction of changes does not require at any stage to inform the users of the Technical Catalogue 2019 about it.

The content of this Technical Catalogue 2019 is not an offer under art. 66 of the Civil Code.

Desktop publishing: Bliskie strony

© 2019 „MERCOR" S.A. Gdańsk - version 1/2019

FIRE VENTILATION SYSTEMS

table of contents

mcr FID S/S c/P	low-resistance single-blade cut-off fire dampers for comfort ventilation systems	5
mcr FID S/S p/P **mcr FID S/S p/O**	single-blade cut-off fire dampers for comfort ventilation systems	18
mcr FID S/V p/P **mcr FID S/V-M p/P**	single-blade smoke exhaust fire dampers for multi-zone fire ventilation systems	46
mcr FID PRO	low-resistance circular single-blade cut-off fire dampers for comfort ventilation systems	68
mcr ZIPP	cut-off fire valves	83
mcr WIP/S	multi-blade cut-off fire dampers for comfort ventilation systems	91
mcr WIP/T **mcr WIP/T-G**	multi-blade transfer and relief fire dampers	105
mcr WIP/V **mcr WIP/V-M**	multi-blade smoke exhaust fire dampers for multi-zone fire ventilation systems	122
mcr WIP PRO/S	multi-blade cut-off fire dampers for comfort ventilation systems	135
mcr WIP PRO/T	multi-blade transfer fire dampers	151
mcr WIP PRO/V **mcr WIP PRO/V-M**	multi-blade smoke exhaust fire dampers for multi-zone fire ventilation systems	171
mcr FS	curtain fire dampers	193
power supply control	trigger control mechanisms	203
additional information	fire dampers and valves	210

mercor®

mcr FID S/S c/P

low-resistance single-blade cut-off fire dampers for comfort ventilation systems

PRODUCT CONFIGURATOR AND CAD MODELS/BIM AT WWW.MERCOR.COM.PL IN THE DESIGNER'S ZONE

BIM CAD

1396-CPR-0114 1488-CPR-0203/W

ATEST HIGIENICZNY

CERTYFIKACJA PRODUKTU

- EIS120
- **Certificate of constancy of performance 1488-CPR-0203/W, 1396-CPR-0114.**
- **Dampers certified for compliance with EN 15650.**
- **Dampers qualified under EN 13501-3 and tested under EN 1366-2.**
- **Cut-off dampers with the fire resistance independent of airflow direction and installation side.**
- **Lower acoustic noise and hydraulic resistance in the system thanks to reduction of damper blade thickness.**

1.1. application

The mcr FID S/S c/P low-resistance cut-off dampers are designed for use in general ventilation systems, where those systems pass through vertical and horizontal construction partitions. The dampers are intended, for example, for systems with increased acoustic requirements.

During a fire, they preserve the fire resistance of the construction partition where ventilation and air conditioning ducts are routed through. Furthermore, they prevent the spreading of fire, smoke and burning fumes to the remaining part of the building which is not on fire. During normal system operation, the damper blade is open. In case of fire, the damper blade closes.

The dampers cannot be operated in systems exposed to dust, except for when they are included in a special, individually developed programme of service and technical inspections.

In the version designed for explosion hazard zones (EX version), the dampers can be operated in gas explosion hazard zone 1 inside and outside ventilation ducts, and dust explosion hazard zone 21 outside these ducts. The dampers have been certified in compliance with the ATEX directive 94/9/EC and meet the requirements of group II category 2G and -/2D:

II 2G Ex h IIC T6 Gb

II -/2D Ex h IIIC T72° -/Db

Ambient temperature: Ta: -20°... +50°C

1.2. design

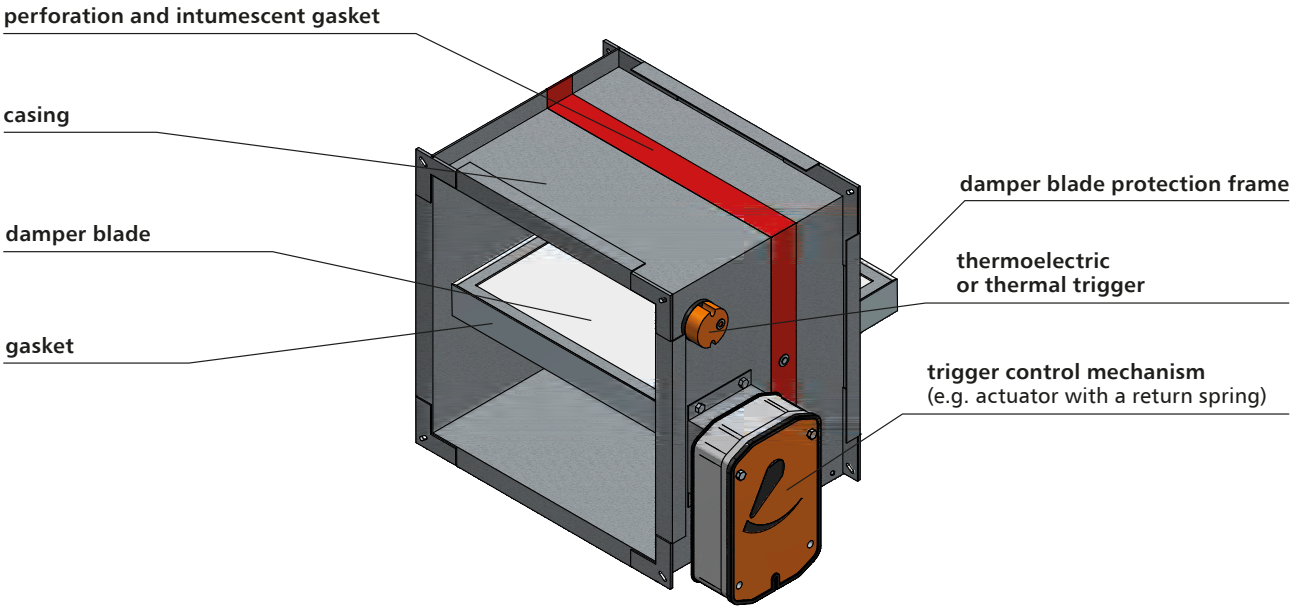

The mcr FID S/S/ c/P cut-off fire dampers consist of a casing with a rectangular cross section, a moving damper blade and a trigger control mechanism, which is activated remotely or automatically when the thermal or thermoelectric trigger is tripped. Standard damper casing is made of galvanised steel sheet. For chemically aggressive environments, special manufacture casing is used, in which steel elements are made of 1.4404 acid-proof steel sheet, while other elements are impregnated.

The casing total length is at least 296 mm. In the middle part, in which the damper blade is placed, the casing is perforated - perforation width is 30 mm. On the inner side of the casing, around the damper blade, there is an intumescent gasket. The damper blade is made of a fire-proof panel with the total thickness of 30 mm.

The damper blade is covered with steel reinforcement profile on blade perimeter. The inner surface is equipped with „P"-type ventilation gasket, which ensures the tightness of dampers at the ambient temperature. Both ends of the fire damper casing are finished with flange connections.

1.3. versions

1.3.1. mcr FID S/S c/P – the cut-off fire damper for ventilation ducts with an actuator with a return spring – damper closing and opening with an actuator

During normal operation, the damper blade of the fire damper remains open. In case of fire, the blade closes automatically or remotely when the power supply is cut off.

The mcr FID S/S c/P dampers are equipped with a Belimo trigger control mechanisms **BFL**, **BFN**, **BF-TL** and **EXBF** axial actuator with a return spring, powered with 24 V AC/DC or 230 V AC, with thermoelectric trigger 72°C (optionally it is possible to use triggers with the nominal tripping temperature of 95°C). The actuators are equipped with limit switches used to monitor the blade position. Furthermore, the mechanical position indicator is placed on the actuator.

The thermoelectric trigger is equipped with a test switch and a power supply indicator (LED).

Dampers with Belimo actuators: analogue BFL, BFN, digital BF-TL, EXBF explosion proof actuators close thanks to thermoelectric trigger tripping or power supply cut-off as a result of the actuator return spring action. The dampers open when the power supply voltage is applied to the actuator terminals. Furthermore, dampers with those actuators may be opened manually using a key.

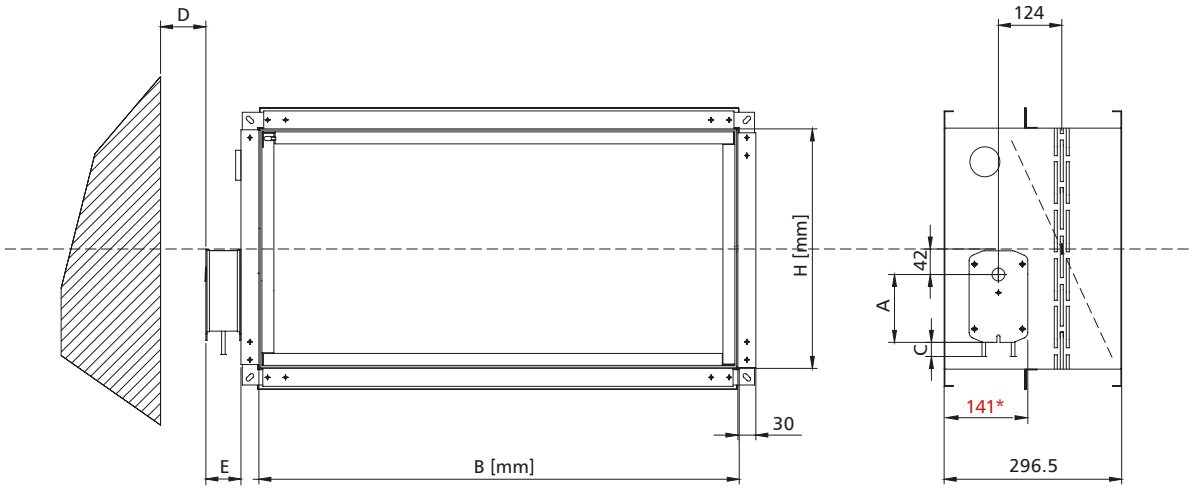

mechanism	A	C	D	E
BFN	157	30	75	57
BFL	138	30	75	53
BF24TL-ST	198	10	75	65
EXBF	225	55	75	175
*embedding border				

1.3.2. **mcr FID S/S c/P** – the cut-off fire damper for ventilation ducts with a spring drive and thermal trigger

During normal operation, the damper blade of the fire damper remains open. In case of fire, the blade closes automatically.

The mcr FID S/S c/P dampers are equipped with a **RST** trigger control mechanism with a spring drive (without an integrated thermal trigger). In this case, a thermal trigger 74°C (optionally 95°C) is installed outside the damper mechanism, on the damper blade itself. After the nominal temperature is exceeded, the thermal trigger is tripped and the louvers close. On the RST mechanism, there is a mechanical blade position indicator. It is possible to equip the damper with WK1 or WK2 limit switches used to signal the blade position state.

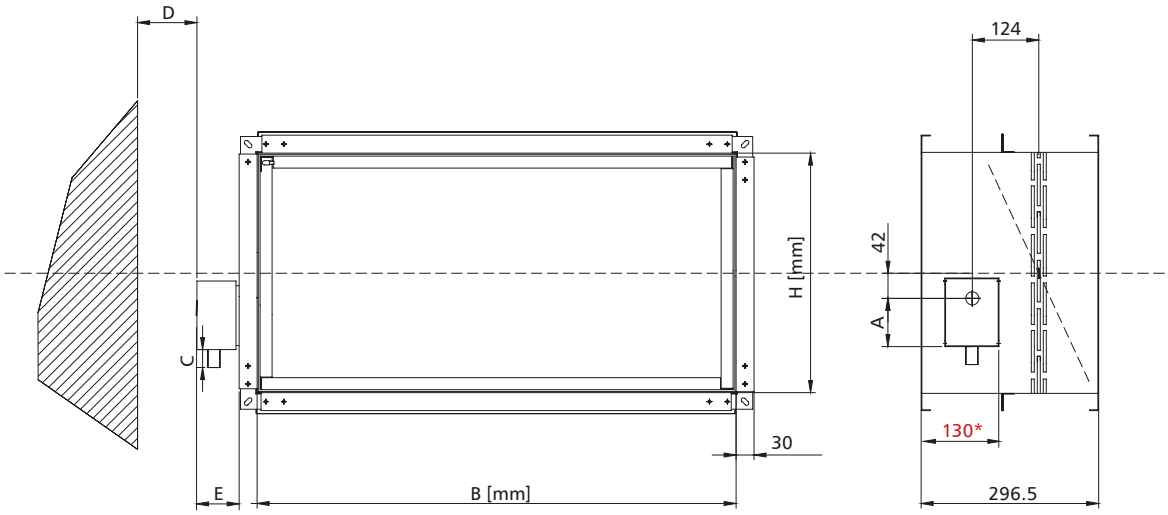

mechanism	A	C	D	E
RST	50	30	75	70
*embedding border				

1.3.3. **mcr FID S/S c/P** – the cut-off fire damper for ventilation ducts with a spring drive and an integrated thermal trigger, optionally equipped with an electromagnetic trigger and limit switches

During normal operation, the damper blade of the fire damper remains open. In case of fire, the blade closes automatically or, in case of a damper with an electromagnetic trigger, additionally using the fire automation.

The mcr FID S/S c/P dampers are equipped with a **RST-KW1** trigger control mechanism with a spring drive and a cam lever system. A thermal trigger 74°C (optionally at 95°C) is integrated into the damper mechanism. After the nominal temperature is exceeded, the thermal trigger is tripped and the louvers close. On the RST-KW1 mechanism, there is a mechanical indicator of blades position. It is possible to equip a trigger control mechanism with an electromagnetic trigger activated by the application („pulse") or removal („break") of the power supply voltage and with limit switches used to signal the blades position state. The mechanism features test and blades button-release functions. Blades re-opening is activated manually.

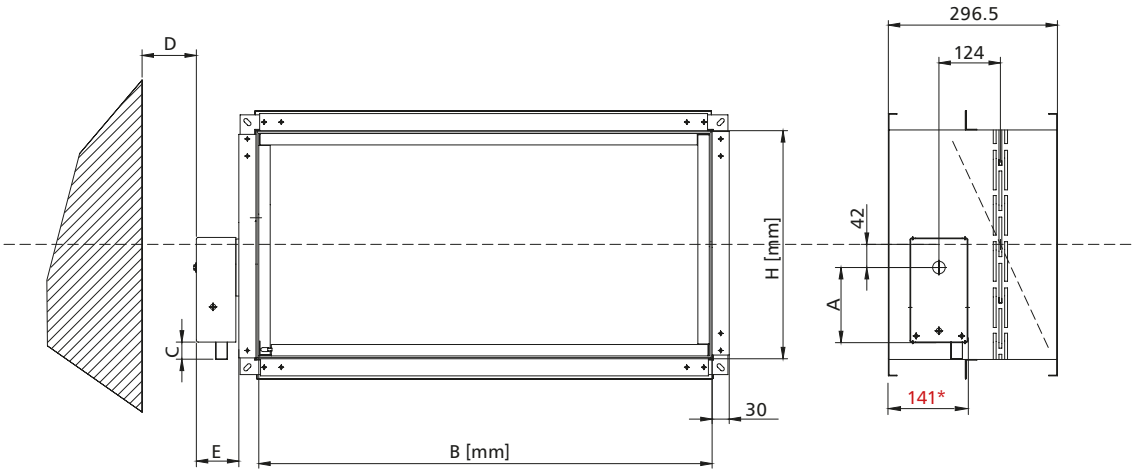

mechanism	A	C	D	E
RST-KW1	130	30	75	80
*embedding border				

1.4. dimensions

Rectangular dampers:

- nominal width B: from 200 mm to 1000 mm
- nominal height H: from 200 mm to 800 mm
- the maximum cross-section surface of one damper up to 0.8 m^2

Apart from the standard dimensions, fire dampers may be manufactured with intermediate dimensions (in 1 mm increments, in the given range).

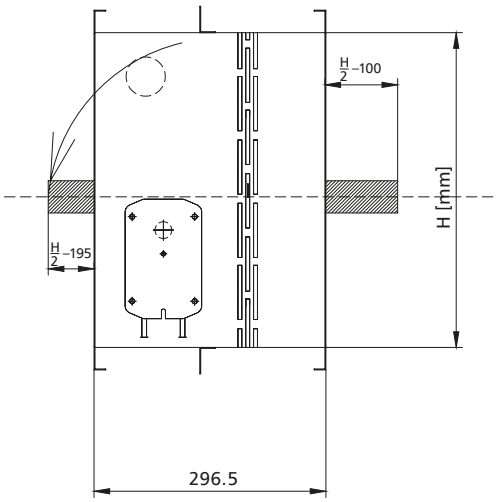

Distance between systems and partitions

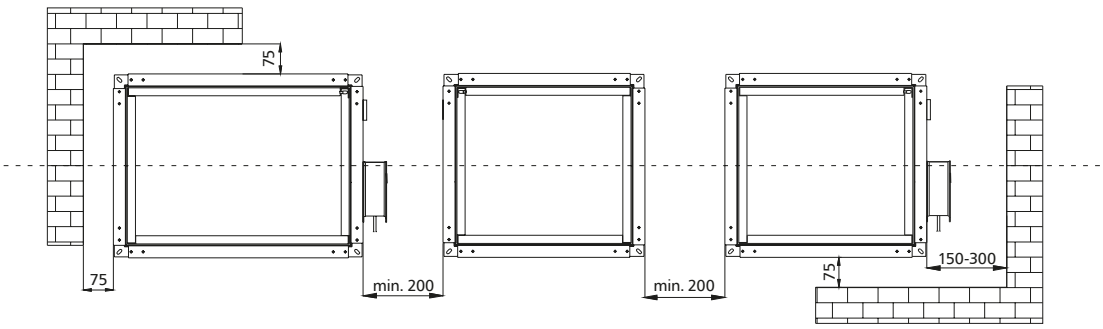

1.5. installation

The mcr FID S/S c/P rectangular dampers have been classified in class EI120(ve ho i↔o)S in a size range of up to 800x400 and EI120(ve i↔o)S in a size range of up to 1000x800. The dampers can be installed in concrete partitions with a minimum thickness of 110 mm, partitions made of full bricks or cellular concrete blocks, min. thickness 115 mm, lightweight walls of cardboard-plaster panels, on a steel framework with the thickness of at least 125 mm and EI120 or higher fire rating, and concrete ceilings with a min. thickness of 150 mm.

1.5.1. preparation of installation openings

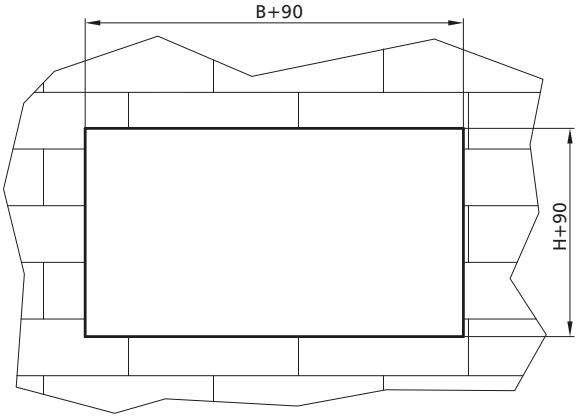

1.5.2. sample installation in lightweight walls of plaster-cardboard panels

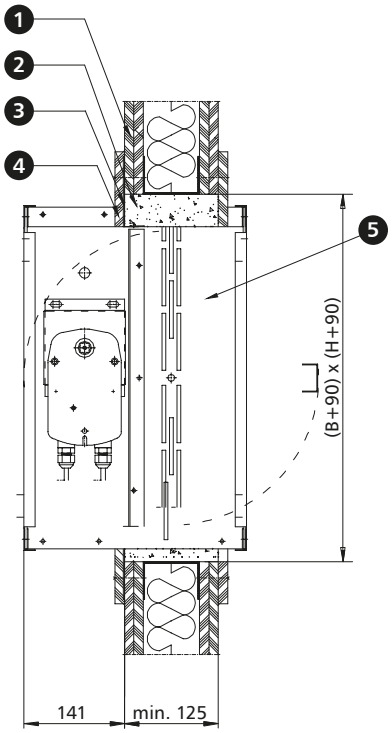

1. lightweight wall
2. sealing - plaster mortar*
3. mounting flange - embedding border
4. circumferential belt of 100 x 12.5 plaster-cardboard panels
5. fire damper mcr FID S

*it is possible to use a different sealing which ensures the required fire resistance

1.5.3. sample installation in concrete walls

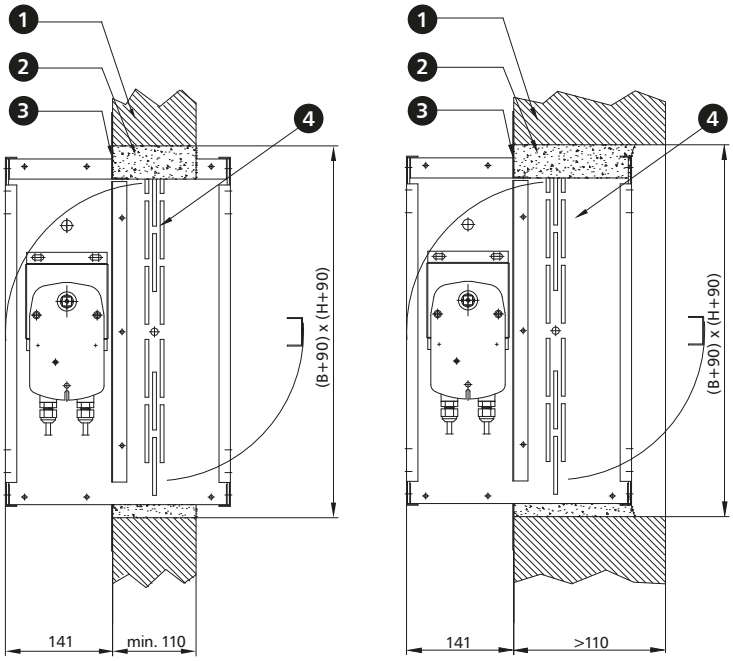

1. rigid wall
2. sealing - cement or cement-lime masonry mortar*
3. mounting flange - embedding border
4. fire damper mcr FID S

*it is possible to use a different sealing which ensures the required fire resistance

1.5.4. sample installation in masonry walls

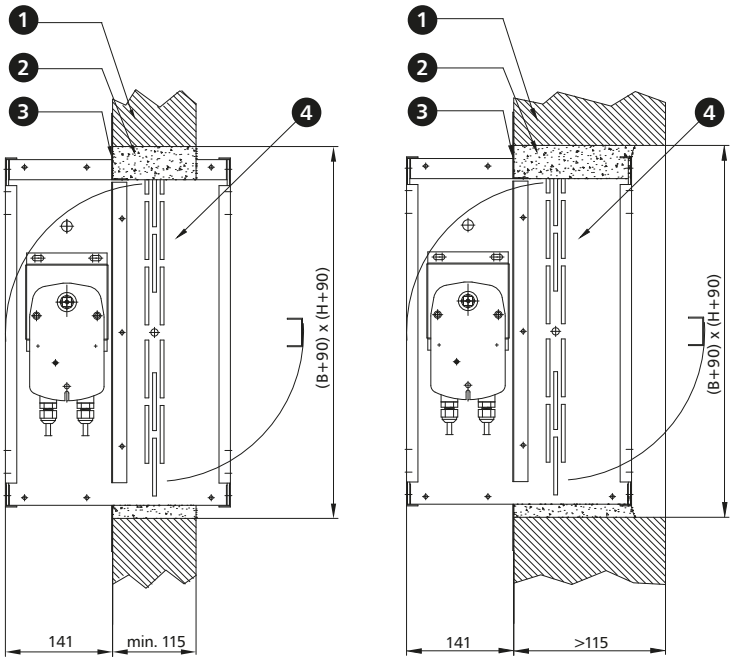

1. rigid wall
2. sealing - cement or cement-lime masonry mortar*
3. mounting flange - embedding border
4. fire damper mcr FID S

*it is possible to use a different sealing which ensures the required fire resistance

If the damper is installed in a wall with the thickness of less than 115 mm, the wall thickness should be increased along the damper circumference by installing a belt of panels or other construction elements to the required thickness.

1.5.5. sample installation in ceilings

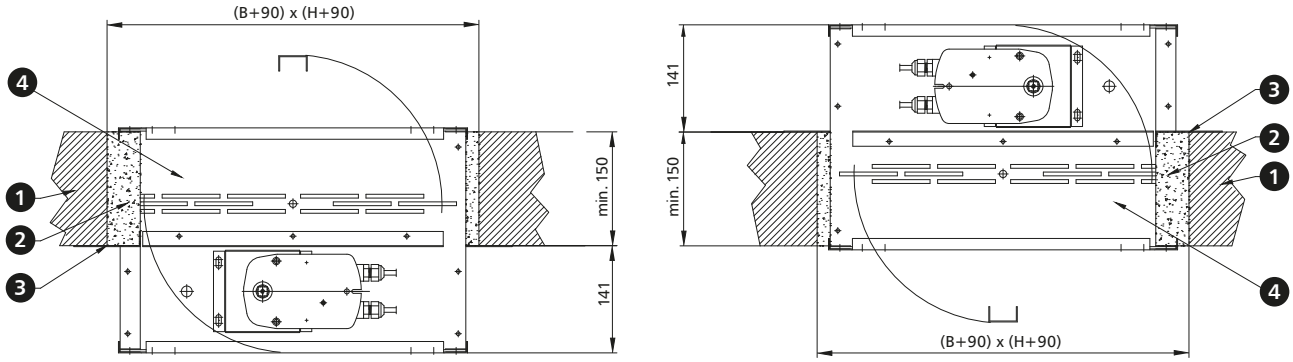

1. ceiling
2. sealing - cement or cement-lime masonry mortar*
3. mounting flange - embedding border
4. fire damper mcr FID S

*it is possible to use a different sealing which ensures the required fire resistance

1.5.6. sample installation outside the fire partition

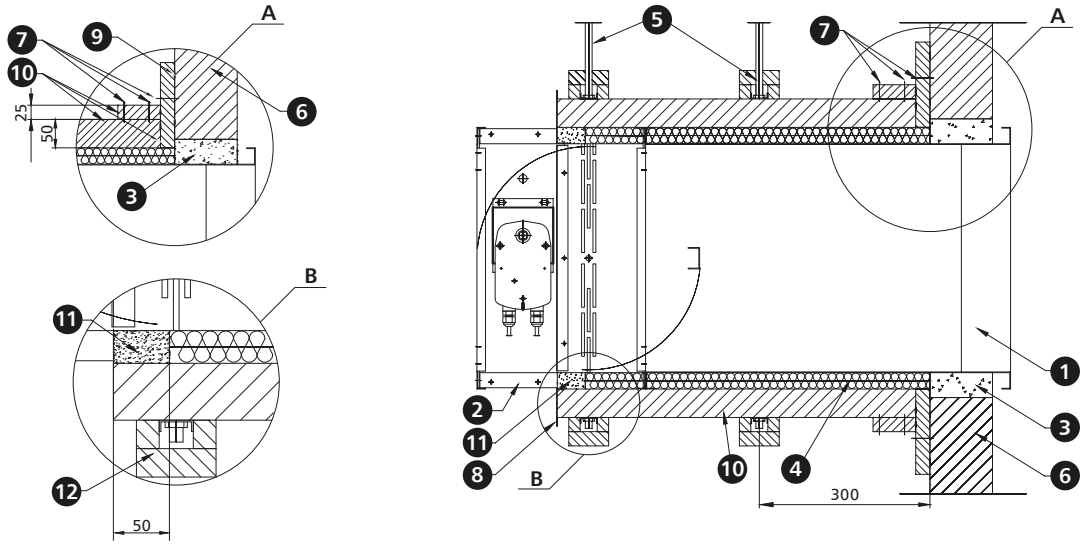

1. ventilation duct
2. fire damper mcr FID S
3. e.g. cement mortar*
4. mineral wool with a density of min. 80 kg/m^3 and a thickness of 30 mm, class A1
5. suspension rod M12
6. wall
7. ST3.5x50 screw
8. angle bar - embedding border
9. board joints sealed with a bonding agent, e.g. Promat H 84
10. fire protection material ensuring EI120S fire resistance or higher
11. e.g. gypsum mortar
12. suspension rod insulation

*it is possible to use a different sealing which ensures the required fire resistance

Installation of the damper with a vertical axis of rotation

Such installation must be clearly stated in the draft documentation and mentioned in the order. The dimensions of the damper BxH should be given as to the damper with a horizontal axis of rotation.

1.6. technical parameters of mcr FID S/S c/P rectangular dampers

B – nominal width [mm]
H – nominal height [mm]
v – velocity [m/s]
Sk – duct cross-section [m²]
Se – damper active cross-section [m²]
Q – flow [m³/h]
dp – pressure drop [Pa]
L_{WA} – damper noise level [dB]

			height H [mm]															
			200					250					300					
		v [m/s]	Sk [m²]	Se [m²]	Q [m³/h]	dp [Pa]	L_{WA} [dB]	Sk [m²]	Se [m²]	Q [m³/h]	dp [Pa]	L_{WA} [dB]	Sk [m²]	Se [m²]	Q [m³/h]	dp [Pa]	L_{WA} [dB]
width B [mm]	200	4	0.04	0.033	468	6	26	0.05	0.043	612	6	26	0.06	0.053	756	5	26
		6			702	14	36			918	13	37			1 134	12	37
		8			936	24	44			1 224	24	45			1 512	22	44
		10			1 170	38	50			1 530	37	50			1 890	34	50
	250	4	0.05	0.041	585	6	27	0.0625	0.053	765	6	27	0.075	0.066	945	5	26
		6			878	14	37			1 148	13	38			1 418	11	37
		8			1 170	24	45			1 530	23	45			1 890	20	44
		10			1 463	38	51			1 913	36	51			2 363	31	50
	300	4	0.06	0.049	702	6	27	0.075	0.064	918	6	28	0.09	0.079	1 134	4	26
		6			1 053	13	38			1 377	13	38			1 701	10	36
		8			1 404	24	45			1 836	22	46			2 268	18	44
		10			1 755	37	51			2 295	35	51			2 835	28	49
	350	4	0.07	0.057	819	6	27	0.0875	0.074	1 071	5	27	0.105	0.092	1 323	4	25
		6			1 229	13	38			1 607	11	37			1 985	9	35
		8			1 638	22	45			2 142	20	45			2 646	16	43
		10			2 048	35	51			2 678	31	50			3 308	25	49
	400	4	0.08	0.065	936	5	27	0.1	0.085	1 224	4	25	0.12	0.105	1 512	4	24
		6			1 404	12	38			1 836	9	35			2 268	8	34
		8			1 872	22	45			2 448	17	43			3 024	14	42
		10			2 340	34	51			3 060	26	49			3 780	22	48
	450	4	0.09	0.073	1 053	5	27	0.1125	0.096	1 377	3	22	0.135	0.118	1 701	3	23
		6			1 580	11	37			2 066	7	33			2 552	7	33
		8			2 106	20	45			2 754	13	40			3 402	13	41
		10			2 633	31	50			3 443	20	46			4 253	20	47
	500	4	0.1	0.081	1 170	4	26	0.125	0.106	1 530	3	23	0.15	0.131	1 890	3	23
		6			1 755	10	36			2 295	8	34			2 835	7	34
		8			2 340	18	44			3 060	13	41			3 780	13	41
		10			2 925	28	50			3 825	21	47			4 725	20	47
	550	4	0.11	0.089	1 287	4	25	0.1375	0.117	1 683	3	23	0.165	0.144	2 079	3	22
		6			1 931	9	36			2 525	7	33			3 119	6	33
		8			2 574	17	43			3 366	13	41			4 158	12	40
		10			3 218	26	49			4 208	20	47			5 198	18	46
	600	4	0.12	0.098	1 404	3	21	0.15	0.128	1 836	3	20	0.18	0.158	2 268	2	20
		6			2 106	7	32			2 754	6	31			3 402	5	31
		8			2 808	12	39			3 672	10	38			4 536	10	38
		10			3 510	19	45			4 590	16	44			5 670	15	44
	650	4	0.13	0.106	1 521	3	22	0.1625	0.138	1 989	3	21	0.195	0.171	2 457	2	20
		6			2 282	7	32			2 984	6	31			3 686	5	30
		8			3 042	12	40			3 978	10	39			4 914	9	38
		10			3 803	19	46			4 973	16	45			6 143	14	44
	700	4	0.14	0.114	1 638	3	21	0.175	0.149	2 142	2	20	0.21	0.184	2 646	2	19
		6			2 457	6	32			3 213	5	31			3 969	5	30
		8			3 276	12	39			4 284	10	38			5 292	8	37
		10			4 095	18	45			5 355	15	44			6 615	13	43
	750	4	0.15	0.122	1 755	3	21	0.1875	0.159	2 295	2	20	0.225	0.197	2 835	2	20
		6			2 633	6	31			3 443	5	31			4 253	5	30
		8			3 510	11	39			4 590	10	39			5 670	8	38
		10			4 388	17	45			5 738	15	44			7 088	13	43
	800	4	0.16	0.130	1 872	2	20	0.2	0.170	2 448	2	20	0.24	0.210	3 024	2	19
		6			2 808	5	30			3 672	5	30			4 536	4	29
		8			3 744	10	38			4 896	9	38			6 048	8	37
		10			4 680	15	43			6 120	14	44			7 560	12	43
	900	4	0.18	0.146	2 106	2	17	0.225	0.191	2 754	2	17	0.27	0.236	3 402	2	17
		6			3 159	4	28			4 131	4	28			5 103	4	27
		8			4 212	8	35			5 508	7	35			6 804	6	35
		10			5 265	12	41			6 885	11	41			8 505	10	41
	1000	4	0.2	0.163	2 340	2	15	0.25	0.213	3 060	1	14	0.3	0.263	3 780	1	14
		6			3 510	3	25			4 590	3	25			5 670	3	25
		8			4 680	6	33			6 120	6	32			7 560	5	32
		10			5 850	10	39			7 650	9	38			9 450	8	38

1.6. technical parameters of mcr FID S/S c/P rectangular dampers

B – nominal width [mm]
H – nominal height [mm]
v – velocity [m/s]
Sk – duct cross-section [m²]
Se – damper active cross-section [m²]
Q – flow [m³/h]
dp – pressure drop [Pa]
L_{WA} – damper noise level [dB]

			height H [mm]														
			350					400					500				
		v [m/s]	Sk [m²]	Se [m²]	Q [m³/h]	dp [Pa]	L_{WA} [dB]	Sk [m²]	Se [m²]	Q [m³/h]	dp [Pa]	L_{WA} [dB]	Sk [m²]	Se [m²]	Q [m³/h]	dp [Pa]	L_{WA} [dB]
width B [mm]	200	4	0.07	0.063	900	5	26	0.08	0.073	1 044	5	26	0.1	0.093	1 332	4	26
		6			1 350	12	37			1 566	11	37			1 998	10	37
		8			1 800	21	44			2 088	19	44			2 664	18	44
		10			2 250	32	50			2 610	30	50			3 330	27	50
	250	4	0.0875	0.078	1 125	4	25	0.1	0.091	1 305	4	25	0.125	0.116	1 665	4	26
		6			1 688	10	36			1 958	9	35			2 498	9	36
		8			2 250	17	43			2 610	16	43			3 330	16	44
		10			2 813	27	49			3 263	25	49			4 163	25	50
	300	4	0.105	0.094	1 350	4	26	0.12	0.109	1 566	4	24	0.15	0.139	1 998	4	26
		6			2 025	10	36			2 349	8	35			2 997	8	36
		8			2 700	17	44			3 132	15	42			3 996	15	44
		10			3 375	27	50			3 915	23	48			4 995	23	50
	350	4	0.1225	0.109	1 575	4	25	0.14	0.127	1 827	4	25	0.175	0.162	2 331	3	25
		6			2 363	9	36			2 741	8	36			3 497	8	36
		8			3 150	15	43			3 654	15	43			4 662	14	43
		10			3 938	24	49			4 568	23	49			5 828	22	49
	400	4	0.14	0.125	1 800	3	24	0.16	0.145	2 088	3	23	0.2	0.185	2 664	3	25
		6			2 700	8	34			3 132	7	34			3 996	7	35
		8			3 600	13	42			4 176	12	41			5 328	13	43
		10			4 500	21	48			5 220	19	47			6 660	20	49
	450	4	0.1575	0.141	2 025	3	24	0.18	0.163	2 349	3	21	0.225	0.208	2 997	3	24
		6			3 038	7	34			3 524	6	32			4 496	7	35
		8			4 050	13	42			4 698	10	39			5 994	12	42
		10			5 063	20	48			5 873	16	45			7 493	18	48
	500	4	0.175	0.156	2 250	2	20	0.2	0.181	2 610	2	20	0.25	0.231	3 330	3	23
		6			3 375	5	31			3 915	5	31			4 995	6	34
		8			4 500	10	38			5 220	9	38			6 660	11	42
		10			5 625	15	44			6 525	14	44			8 325	17	47
	550	4	0.1925	0.172	2 475	2	19	0.22	0.199	2 871	2	20	0.275	0.254	3 663	2	23
		6			3 713	5	29			4 307	5	30			5 495	6	33
		8			4 950	8	37			5 742	8	38			7 326	10	41
		10			6 188	13	43			7 178	13	43			9 158	15	47
	600	4	0.21	0.188	2 700	2	18	0.24	0.218	3 132	2	22	0.3	0.278	3 996	2	22
		6			4 050	4	29			4 698	6	33			5 994	5	32
		8			5 400	8	36			6 264	10	40			7 992	9	40
		10			6 750	12	42			7 830	16	46			9 990	14	46
	650	4	0.2275	0.203	2 925	2	19	0.26	0.236	3 393	2	18	0.325	0.301	4 329	2	21
		6			4 388	4	29			5 090	4	29			6 494	5	32
		8			5 850	8	37			6 786	7	36			8 658	8	39
		10			7 313	12	42			8 483	11	42			10 823	13	45
	700	4	0.245	0.219	3 150	2	18	0.28	0.254	3 654	2	18	0.35	0.324	4 662	2	20
		6			4 725	4	28			5 481	4	29			6 993	4	31
		8			6 300	7	36			7 308	7	36			9 324	7	38
		10			7 875	11	42			9 135	11	42			11 655	12	44
	750	4	0.2625	0.234	3 375	2	18	0.3	0.272	3 915	2	17	0.375	0.347	4 995	2	19
		6			5 063	4	29			5 873	4	28			7 493	4	30
		8			6 750	7	36			7 830	6	36			9 990	7	37
		10			8 438	11	42			9 788	10	41			12 488	10	43
	800	4	0.28	0.250	3 600	2	18	0.32	0.290	4 176	2	18	0.4	0.370	5 328	2	18
		6			5 400	4	29			6 264	4	28			7 992	3	29
		8			7 200	7	36			8 352	6	36			10 656	6	36
		10			9 000	11	42			10 440	10	42			13 320	9	42
	900	4	0.315	0.281	4 050	1	16	0.36	0.326	4 698	1	16	0.45	0.416	5 994	1	16
		6			6 075	3	27			7 047	3	27			8 991	3	26
		8			8 100	6	34			9 396	5	34			11 988	5	34
		10			10 125	9	40			11 745	8	40			14 985	8	40
	1000	4	0.35	0.313	4 500	1	14	0.4	0.363	5 220	1	13	0.5	0.463	6 660	1	13
		6			6 750	3	24			7 830	2	24			9 990	2	24
		8			9 000	5	32			10 440	4	32			13 320	4	31
		10			11 250	7	38			13 050	7	37			16 650	6	37

1.6. technical parameters of mcr FID S/S c/P rectangular dampers

B – nominal width [mm]
H – nominal height [mm]
v – velocity [m/s]
Sk – duct cross-section [m²]
Se – damper active cross-section [m²]
Q – flow [m³/h]
dp – pressure drop [Pa]
L_{WA} – damper noise level [dB]

			height H [mm]														
			600					700					800				
		v [m/s]	Sk [m²]	Se [m²]	Q [m³/h]	dp [Pa]	L_{WA} [dB]	Sk [m²]	Se [m²]	Q [m³/h]	dp [Pa]	L_{WA} [dB]	Sk [m²]	Se [m²]	Q [m³/h]	dp [Pa]	L_{WA} [dB]
width B [mm]	200	4	0.12	0.113	1 620	4	26	0.14	0.133	1 908	4	26	0.16	0.153	2 196	4	26
		6			2 430	9	36			2 862	9	36			3 294	8	36
		8			3 240	16	44			3 816	15	44			4 392	14	44
		10			4 050	25	50			4 770	24	50			5 490	22	49
	250	4	0.15	0.141	2 025	4	26	0.175	0.166	2 385	4	26	0.2	0.191	2 745	3	25
		6			3 038	8	36			3 578	8	36			4 118	7	36
		8			4 050	15	44			4 770	14	44			5 490	13	43
		10			5 063	23	50			5 963	22	49			6 863	21	49
	300	4	0.18	0.169	2 430	3	25	0.21	0.199	2 862	3	25	0.24	0.229	3 294	3	25
		6			3 645	8	36			4 293	7	36			4 941	7	36
		8			4 860	14	44			5 724	13	43			6 588	12	43
		10			6 075	22	49			7 155	20	49			8 235	19	49
	350	4	0.21	0.197	2 835	3	25	0.245	0.232	3 339	3	25	0.28	0.267	3 843	3	25
		6			4 253	7	36			5 009	7	35			5 765	6	35
		8			5 670	13	43			6 678	12	43			7 686	11	43
		10			7 088	20	49			8 348	19	49			9 608	18	49
	400	4	0.24	0.225	3 240	3	25	0.28	0.265	3 816	3	24	0.32	0.305	4 392	3	24
		6			4 860	7	35			5 724	6	35			6 588	6	35
		8			6 480	12	43			7 632	11	42			8 784	10	42
		10			8 100	18	48			9 540	17	48			10 980	16	48
	450	4	0.27	0.253	3 645	3	24	0.315	0.298	4 293	3	24	0.36	0.343	4 941	2	24
		6			5 468	6	34			6 440	6	34			7 412	5	34
		8			7 290	11	42			8 586	10	42			9 882	9	42
		10			9 113	17	48			10 733	16	48			12 353	15	47
	500	4	0.3	0.281	4 050	2	23	0.35	0.331	4 770	2	23	0.4	0.381	5 490	2	23
		6			6 075	6	34			7 155	5	34			8 235	5	33
		8			8 100	10	41			9 540	9	41			10 980	9	41
		10			10 125	15	47			11 925	14	47			13 725	13	47
	550	4	0.33	0.309	4 455	2	22	0.385	0.364	5 247	2	22	0.44	0.419	6 039	2	22
		6			6 683	5	33			7 871	5	33			9 059	4	33
		8			8 910	9	41			10 494	8	40			12 078	8	40
		10			11 138	14	46			13 118	13	46			15 098	12	46
	600	4	0.36	0.338	4 860	2	22	0.42	0.398	5 724	2	21	0.48	0.458	6 588	2	21
		6			7 290	5	32			8 586	4	32			9 882	4	32
		8			9 720	8	40			11 448	8	39			13 176	7	39
		10			12 150	13	45			14 310	12	45			16 470	11	45
	650	4	0.39	0.366	5 265	2	21	0.455	0.431	6 201	2	20	0.52	0.496	7 137	2	20
		6			7 898	4	31			9 302	4	31			10 706	4	31
		8			10 530	7	39			12 402	7	39			14 274	6	38
		10			13 163	12	45			15 503	11	44			17 843	10	44
	700	4	0.42	0.394	5 670	2	20	0.49	0.464	6 678	2	19	0.56	0.534	7 686	1	19
		6			8 505	4	30			10 017	4	30			11 529	3	30
		8			11 340	7	38			13 356	6	38			15 372	6	37
		10			14 175	11	44			16 695	10	43			19 215	9	43
	750	4	0.45	0.422	6 075	2	19	0.525	0.497	7 155	1	18	0.6	0.572	8 235	1	18
		6			9 113	3	29			10 733	3	29			12 353	3	29
		8			12 150	6	37			14 310	6	37			16 470	5	36
		10			15 188	10	43			17 888	9	42			20 588	8	42
	800	4	0.48	0.450	6 480	1	18	0.56	0.530	7 632	1	17	0.64	0.610	8 784	1	17
		6			9 720	3	28			11 448	3	28			13 176	3	28
		8			12 960	5	36			15 264	5	35			17 568	5	35
		10			16 200	9	42			19 080	8	41			21 960	7	41
	900	4	0.54	0.506	7 290	1	15	0.63	0.596	8 586	1	15	0.72	0.686	9 882	1	15
		6			10 935	2	26			12 879	2	25			14 823	2	25
		8			14 580	4	33			17 172	4	33			19 764	4	33
		10			18 225	7	39			21 465	6	39			24 705	6	39
	1000	4	0.6	0.563	8 100	1	13	0.7	0.663	9 540	1	12	0.8	0.763	10 980	1	12
		6			12 150	2	23			14 310	2	23			16 470	2	22
		8			16 200	3	31			19 080	3	30			21 960	3	30
		10			20 250	5	36			23 850	5	36			27 450	5	36

The mcr FID S fire damper selection program is available at **www.mercor.com.pl**, in the Designer Zone.

1.7. estimated weights of mcr FID S/S c/P dampers for rectangular ventilation ducts [kg]

height H [mm]	width B [mm]									
	200	**250**	**300**	**400**	**500**	**600**	**700**	**800**	**900**	**1000**
200	7.5	8	9	10	11	14	16	18	20	22
250	8	9.5	10	11	14	15	17	19	21	23
300	9	10.5	11	12	15	16	18	20	22	24
350	10	11.5	12	13	16	17	19	21	23	25
400	11	12.5	13.5	14	17	18	21	22	24	26
500	13	14.5	15.5	16	18	19	22	24	26	28
600	15	16.5	17.5	18.5	20	22	24	26	28	30
700	17	18.5	19.5	20	22	24	26	28	30	32
800	19	20.5	21.5	22	24	26	28	30	32	34

For dampers with no actuator, subtract ~1 kg.

1.8. accessories

1.8.1. mcr KRP connection pipe

The mcr KRP connection pipes are used to connect a circular ventilation duct to a rectangular damper. The connection is a „bare end" pipe. The diameter of the pipe is 2 mm smaller than the diameter of the ventilation duct.

Note: due to the asymmetrical position of the fire blade in the damper casing, the connection pipes are of different lengths L, depending on the side of the damper to which they are to be mounted.

The connection pipes are supplied for both sides of the damper.

Dimensions:

BxH - damper dimensions [mm]

ØD - diameter of the connection duct [mm]

L - length [mm] calculated from the formula: H/2-50 for one connection side and H/2-150 for the other connection side

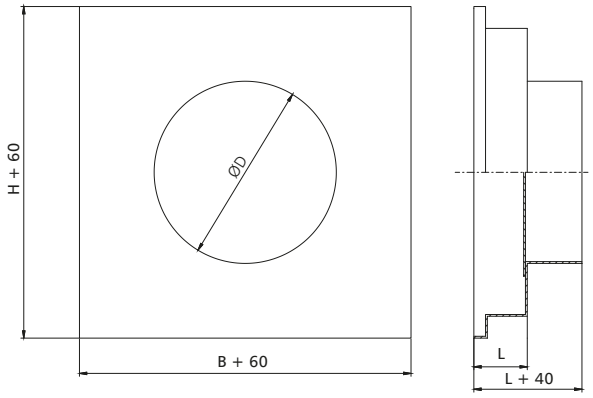

Marking:

mcr KRP / FID S / B x H / DIA / X

- material
- connection duct diameter
- damper dimensions
- type of a damper for which the connection pipe is ordered
- connection pipe

X – material

[no symbol] – galvanised steel, Zn 275 g/m^2 coating
KN – stainless steel
KK – 1.4404 acid-proof steel

1.8.2. casing module with KRW-type access

The casing modules with the KRW-type access are made of sheet metal and equipped with connection flanges. The casing features an access opening with a cover. The module enables to access the damper blade or a drive train quickly without having to dismantle the damper or the duct on which it is installed.

- KRW P module for rectangular damper

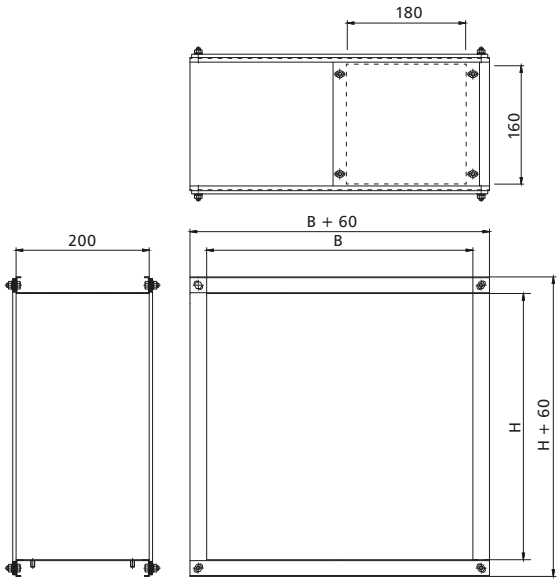

Marking:

mcr KRW P / FID S / B x H / X

- material
- damper dimensions
- type of damper for which the module is ordered
- rectangular module

X – material

[no symbol] – galvanised steel, Zn 275 g/m^2 coating
KN – stainless steel
KK – 1.4404 acid-proof steel

1.9. marking

mcr FID S/S c/P B x H 1 / 2 / 3

- additional parameters
- material
- control
- width x height (nominal)
- damper type

1 – control:

– RST trigger control mechanism
RST – thermal trigger
RST/WK1 – thermal trigger + limit switch (closed blade signal)
RST/WK2 – thermal trigger + limit switch (open/closed blade signal)

– RST-KW1 trigger control mechanism
RST-KW1/S – thermal trigger
RST-KW1/S/WK2 – thermal trigger + limit switch (open/closed blade signal)
RST-KW1/24I – thermal trigger + „pulse" electromagnetic trigger, U = 24 V DC and a limit switch (closed/open damper blade signal)
RST-KW1/24P – thermal trigger + „break" electromagnetic trigger, U = 24 V DC and a limit switch (closed/open damper blade signal)
RST-KW1/230I – thermal trigger + „pulse" electromagnetic trigger, U = 230 V AC and a limit switch (closed/open damper blade signal)
RST-KW1/230P – thermal trigger + „break" electromagnetic trigger, U = 230 V AC and a limit switch (closed/open damper blade signal)

- Belimo trigger control mechanism
BF24TL-T-ST (with the BKN230-24MP option) – actuator with a return spring, U = 24 V, MP Bus digital control
EXBF24-T – explosion proof actuator with a return spring in the Ex version, U = 24 V AC/DC
EXBF230-T – explosion proof actuator with a return spring in the Ex version, U = 230 V AC
BFL24-T – actuator with a return spring, U = 24 V AC/DC
BFL230-T – actuator with a return spring, U = 230 V AC
BFL24-T-ST (with the BKN230-24 option) – actuator with a return spring, for the SBS Control system
BFN24-T – actuator with a return spring, U = 24 V AC/DC
BFN230-T – actuator with a return spring, U = 230 V AC
BFN24-T-ST (with the BKN230-24 option) – actuator with a return spring, for the SBS Control system

2 – material

[no symbol] – galvanised steel, Zn 275 g/m^2 coating
KN – stainless steel
KK – 1.4404 acid-proof steel

3 – additional parameters

Thermoelectric or thermal triggers
[no symbol] - trigger for 72°C
ZBAE95 – thermoelectric trigger for 95°C
ZBAT95 – thermoelectric trigger for 95°C
T93-95 – thermal trigger for 95°C
Position of the control mechanism (see chapter 14.2 of this Catalogue)
[no symbol] – perpendicular to the axis of damper rotation
WOK – along the axis of damper rotation
Axis of rotation of the damper
[no symbol] - horizontal axis of rotation
PP – vertical axis of rotation
PP_D – vertical axis of rotation - mechanism at the bottom of the damper
PP_G – vertical axis of rotation - mechanism at the top of the damper
Manufacture standard (see chapter 14.2 of this Catalogue)
[no symbol] – right damper
KL – left damper
KO – inverse damper
Extended damper casing
[no symbol] – standard casing length
400 – casing with a length of 400 mm
Note: the additional parameters to be entered preceded by the „/" sign.

example marking:

mcr FID S/S c/P 400 x 400 BFL24-T

EIS120 low-resistance cut-off damper with a 24 V compact Belimo actuator with limit switches.

Chapter 13 - power supply and control (p. 203) contains:
- technical specifications and connection diagrams for the trigger control mechanisms supporting the damper.

Chapter 14 - additional information (p. 210) contains:
- location of trigger control mechanisms in relation to the damper - production standards,
- table for quick selection of dampers, depending on fire separation and its thickness,
- installation distances: damper-ceiling, damper-wall, damper-damper.

mcr FID S/S p/P
mcr FID S/S p/O

single-blade cut-off fire dampers for comfort ventilation systems

PRODUCT CONFIGURATOR AND CAD MODELS/BIM AT WWW.MERCOR.COM.PL IN THE DESIGNER'S ZONE

BIM CAD

1396-CPR-0103

1488-CPR-0422/W

ATEST HIGIENICZNY

CERTYFIKACJA PRODUKTU

- EIS120
- **Certificate of constancy of performance 1488-CPR-0422/W and 1396-CPR-0103.**
- **Dampers certified for compliance with EN 15650.**
- **Dampers qualified under EN 13501-3 and tested under EN 1366-2.**
- **Cut-off dampers with the fire resistance independent of airflow direction and installation side.**
- **Dampers for rectangular and circular ventilation ducts.**

2.1. application

The mcr FID S/S p/P and mcr FID S/S p/O cut-off dampers are designed for use in general ventilation systems, where those systems pass through construction partitions.

During a fire, they preserve the fire resistance of the construction partition where ventilation and air conditioning ducts are routed through. Furthermore, they prevent the spreading of fire, smoke and burning fumes to the remaining part of the building which is not on fire. During normal system operation, the damper blade is open. In case of fire, the damper blade closes.

Additionally mcr FID S/S dampers may be used as relief dampers in gas extinguishing systems, in which case they are equipped with drives without thermoelectric or thermal triggers.

In the version designed for explosion hazard zones (EX version), the dampers can operate in gas explosion hazard zone 1 inside and outside ventilation ducts, and dust explosion hazard zone 21 outside these ducts. The dampers have been certified in compliance with the ATEX directive 94/9/EC and meet the requirements of group II category 2G and -/2D:

II 2G Ex h IIC T6 Gb

II -/2D Ex h IIIC T72° -/Db

Ambient temperature: Ta: -20°... +50°C

2.2. design

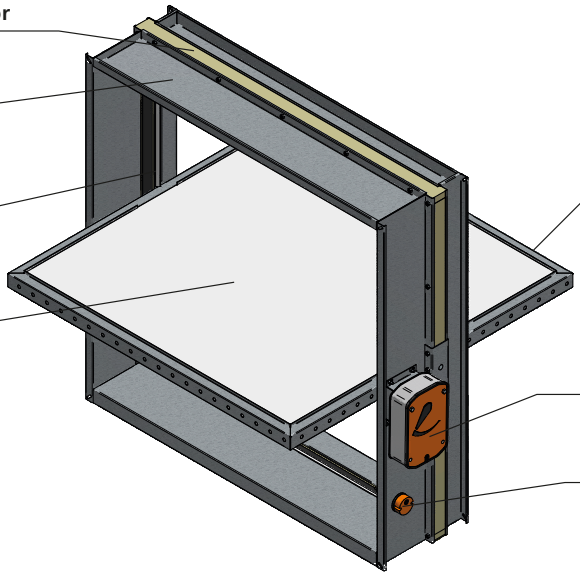

The mcr FID S/S cut-off dampers consist of a casing with a rectangular (mcr FID S/S p/P) or circular (mcr FID S/S p/O) cross-section, made of two segments separated with a fire-proof panel with the cross-section of 20 x 40 mm, a moving damper blade and a trigger control mechanism, which is activated remotely or automatically by tripping a thermal or thermoelectric trigger. Standard damper casing is made of galvanised steel sheet. For chemically aggressive environments, special manufacture casing is used, in which steel elements are made of 1.4404 acid-proof steel sheet, while other elements are impregnated. The casing total length is at least 296 mm. Dampers may be made with an extension element, in such case the casing length is 400 mm.

The damper blade is made of a fire-proof panel with the total thickness of 40 mm, which is covered with a reinforcement steel profile. The inner side of the fire damper casing is equipped with an intumescent gasket. There are stop profiles fastened to the inner casing surface, which limit the rotating motion of the damper blade. The stop shaped are lined with a polyethylene ventilation-grade seal. In dampers with a rectangular cross-section, both ends are finished with flange connections, and in circular dampers, with nipple, muff or flange connections.

2.3. versions

2.3.1. mcr FID S/S – the cut-off fire damper for ventilation ducts with an actuator with a return spring – damper closing and opening with an actuator

During normal operation, the damper blade of the fire damper remains open. In case of fire, the blade closes automatically or remotely when the power supply is cut off.

The mcr FID S/S c/P dampers are equipped with a trigger control Belimo mechanisms **BF**, **BFL**, **BFN**, **BF-TL**, **EXBF** - axial actuator with a return spring, powered with 24 V AC/DC or 230 V AC, with thermoelectric trigger 72°C (optionally it is possible to use triggers with the nominal tripping temperature of 95°C).

The actuators are equipped with limit switches used to monitor the blade position. Furthermore, the mechanical position indicator is placed on the actuator.

The thermoelectric trigger is equipped with a test switch and a power supply indicator (LED).

Dampers with Belimo actuators: analogue BF, BFL, BFN, digital BF-TL, EXBF explosion proof actuators close thanks to thermoelectric trigger tripping or power supply cut-off as a result of the actuator return spring action. The dampers open when the power supply voltage is applied to the actuator terminals. Furthermore, dampers with those actuators may be opened manually using a key.

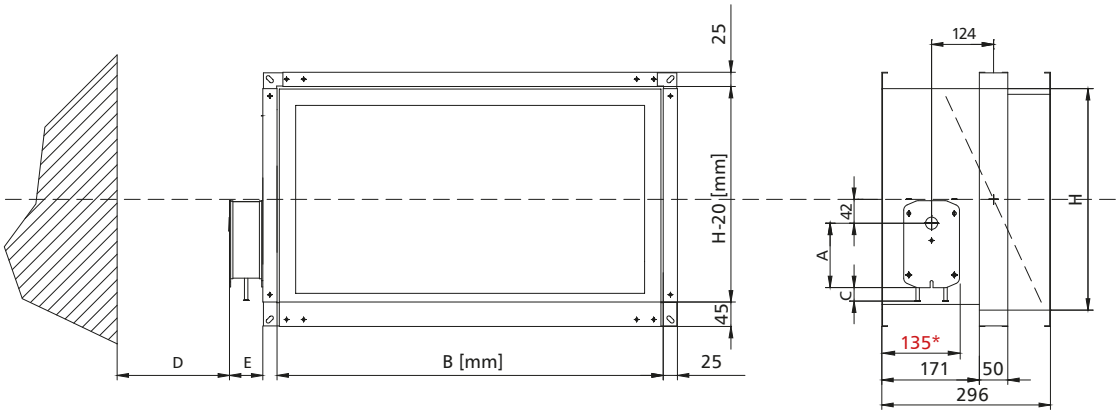

mechanism	A	C	D	E
BFN	157	30	75	62
BFL	138	30	75	58
BF24TL-ST	198	10	75	70
EXBF	225	55	75	175
BF	198	10	75	70
*embedding border				

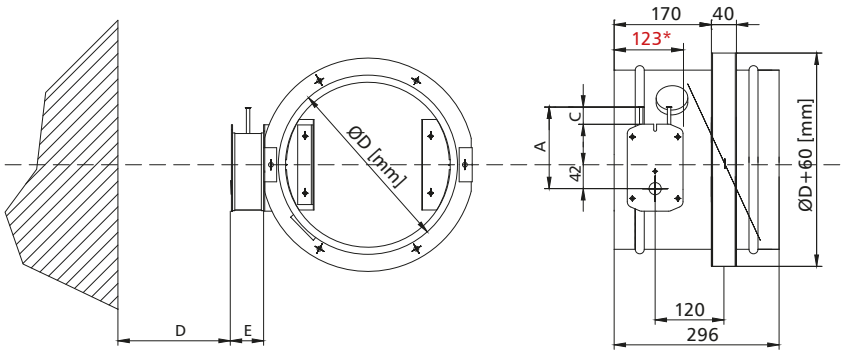

mounting flange

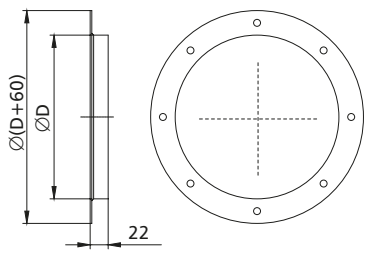

mechanism	A	C	D	E
BFN	157	30	75	42
BFL	138	30	75	38
BF24TL-ST	198	10	75	50
EXBF	225	55	75	160
BF	198	10	75	50
*embedding border				

2.3.2. mcr FID S/S – the cut-off fire damper for ventilation ducts with a spring drive and thermal trigger

During normal operation, the damper blade of the fire damper remains open. In case of fire, the blade closes automatically.

The mcr FID S/S dampers are equipped with a **RST** trigger control mechanism with a drive spring (without an integrated thermal trigger). In this case, a thermal trigger 74°C (optionally 95°C) is installed outside the damper mechanism, on the damper blade itself. After the nominal temperature is exceeded, the thermal trigger is tripped and the louvers close. On the RST mechanism, there is a mechanical blade position indicator. It is possible to equip the damper with WK1 or WK2 limit switches used to signal the blade position state.

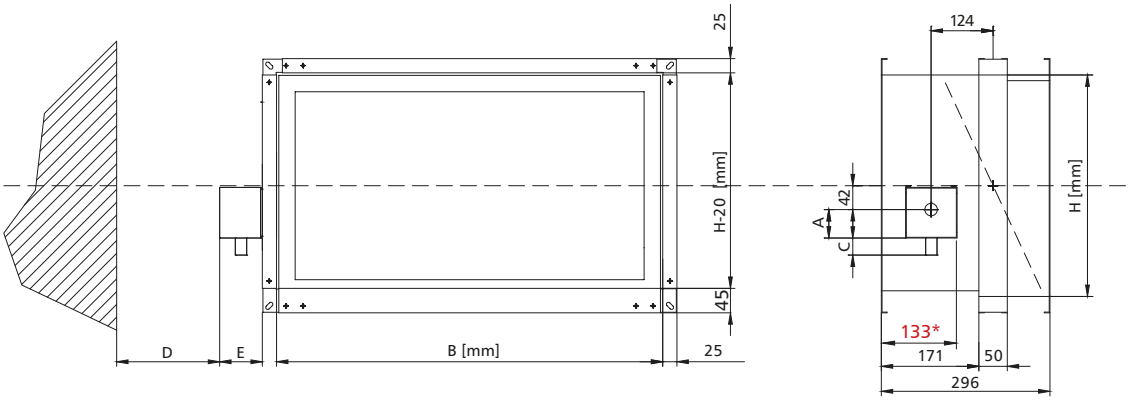

mechanism	A	C	D	E
RST	50	30	75	75
*embedding border				

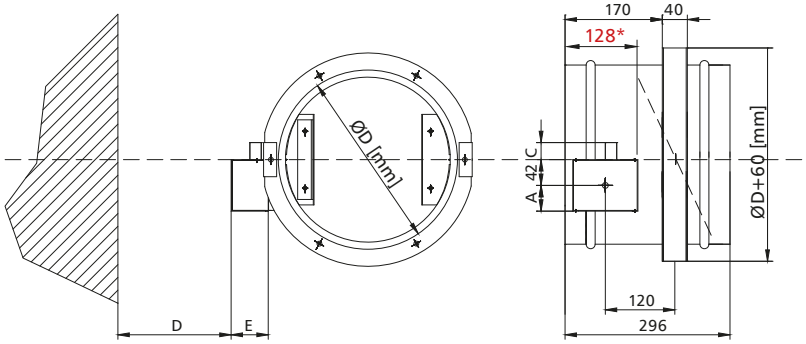

mechanism	A	C	D	E
RST	40	30	75	55
*embedding border				

2.3.3. mcr FID S/S – the cut-off fire damper for ventilation ducts with a spring drive and an integrated thermal trigger, optionally equipped with an electromagnetic trigger and limit switches

During normal operation, the damper blade of the fire damper remains open. In case of fire, the blade closes automatically or, in case of a damper with an electromagnetic trigger, additionally using the fire automation.

The mcr FID S/S dampers are equipped with a **RST-KW1** trigger control mechanism with a drive spring and a cam-lever system. A thermal trigger 74°C (optionally at 95°C) is integrated into the damper mechanism. After the nominal temperature is exceeded, the thermal trigger is tripped and the louvers close. On the RST-KW1 mechanism, there is a mechanical indicator of blades position. It is possible to equip a trigger control mechanism with an electromagnetic trigger activated by the application („pulse") or removal („break") of the power supply voltage and with limit switches used to signal the blades position state. The mechanism features test and blade button-release functions. Blade re-opening is activated manually. It is not required to dismantle the system to replace the thermal trigger. The RST-KW1 mechanism may be replaced with an electric actuator.

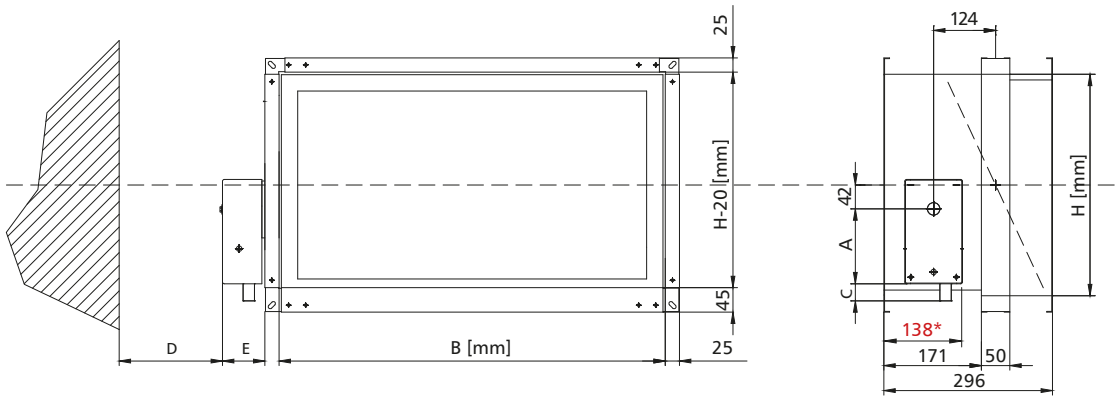

mechanism	A	C	D	E
RST-KW1	130	30	75	85
*embedding border				

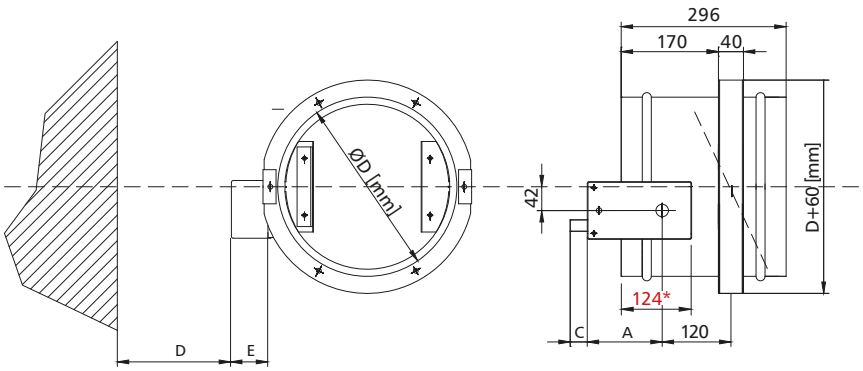

mechanism	A	C	D	E
RST-KW1	130	30	75	65
*embedding border				

2.4. dimensions

Rectangular dampers:

- nominal width B: from 200 mm to 1500 mm
- nominal height H: from 200 mm to 1500 mm
- the maximum cross-section surface of one damper up to 1.8 m^2

Apart from the standard dimensions, fire dampers may be manufactured with intermediate dimensions (in 1 mm increments, in the given range).

Circular dampers:

- nominal diameter D from 250 mm to 630 mm

Apart from the standard dimensions, fire dampers may be manufactured with intermediate dimensions (in 1 mm increments, in the given range).

mcr FID S/S p/P damper

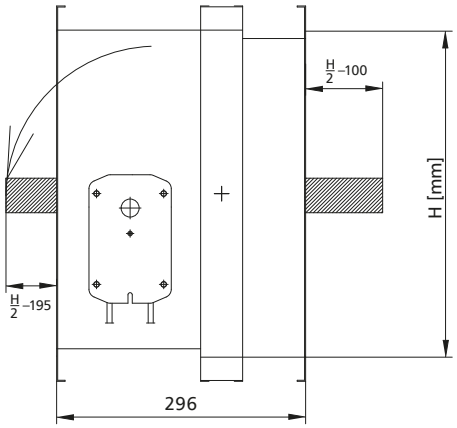

mcr FID S/S p/O damper

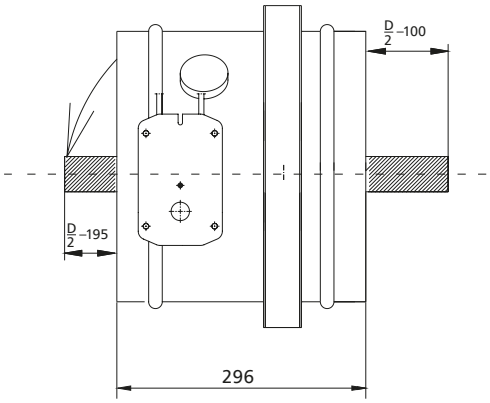

2.5. installation

The mcr FID S/S p/P rectangular dampers are EI120(ve ho i↔o)S-rated if installed in concrete partitions, partitions made of full bricks or cellular blocks with a thickness of at least 110 mm, lightweight walls made of gypsum cardboard panels on a steel framework with a thickness of at least of min. 125 mm and EI120 or higher fire rating, and concrete floors with a thickness of min. 150 mm. The dampers can also be installed away from concrete and masonry walls with a thickness of not less than 120 mm, provided that the section of a ventilation duct between the damper and the wall meets the criteria of EIS120 fire rating.

The mcr FID S/S p/O rectangular dampers are EI120(ve ho i↔o)S-rated if installed in concrete partitions made of full bricks or cellular blocks with a thickness of at least 110 mm, lightweight walls made of gypsum cardboard panels on a steel framework with a thickness of min. 125 mm and EI120 or higher fire rating, and concrete floors of min. 150 mm.

2.5.1. preparation of installation openings

mcr FID S/S p/P damper

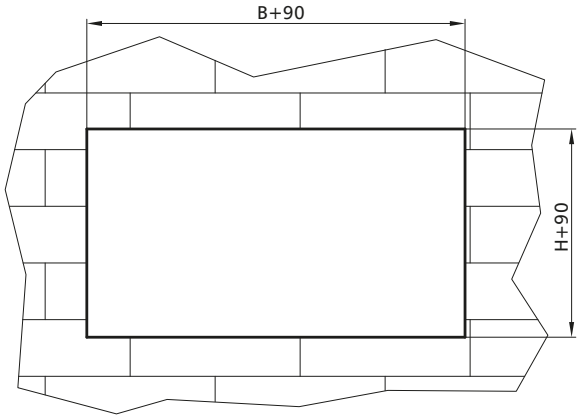

mcr FID S/S p/O damper

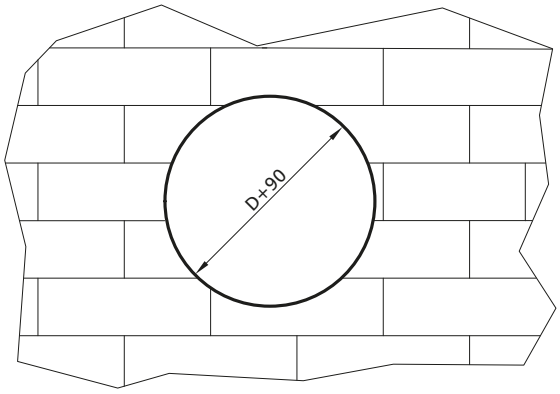

2.5.2. sample installation in lightweight walls of plaster-cardboard panels

mcr FID S/S p/P damper

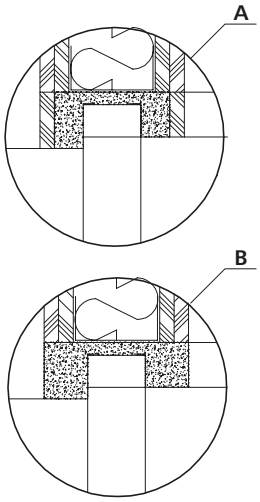

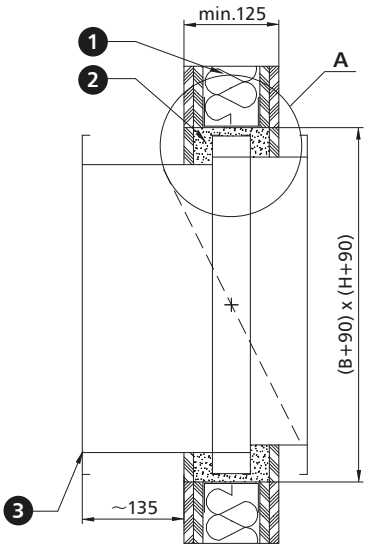

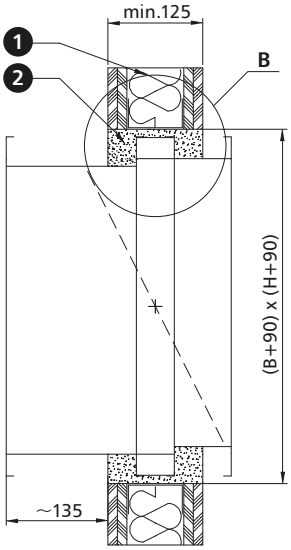

1. lightweight wall
2. sealing - plaster mortar*
3. fire damper mcr FID S

*it is possible to use a different sealing which ensures the required fire resistance

mcr FID S/S p/O damper

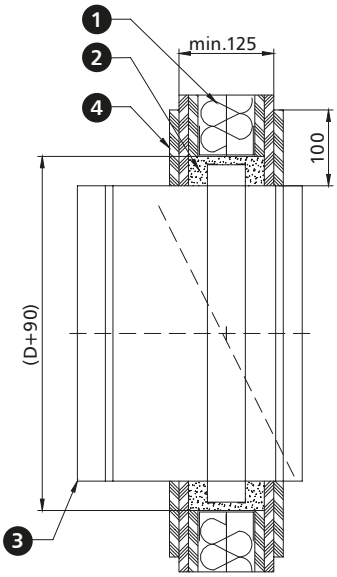

1. lightweight wall
2. sealing - plaster mortar*
3. fire damper mcr FID S
4. circumferential band of plaster-cardboard panels

*it is possible to use a different sealing which ensures the required fire resistance

2.5.3. sample installation in concrete and masonry walls

mcr FID S/S p/P damper

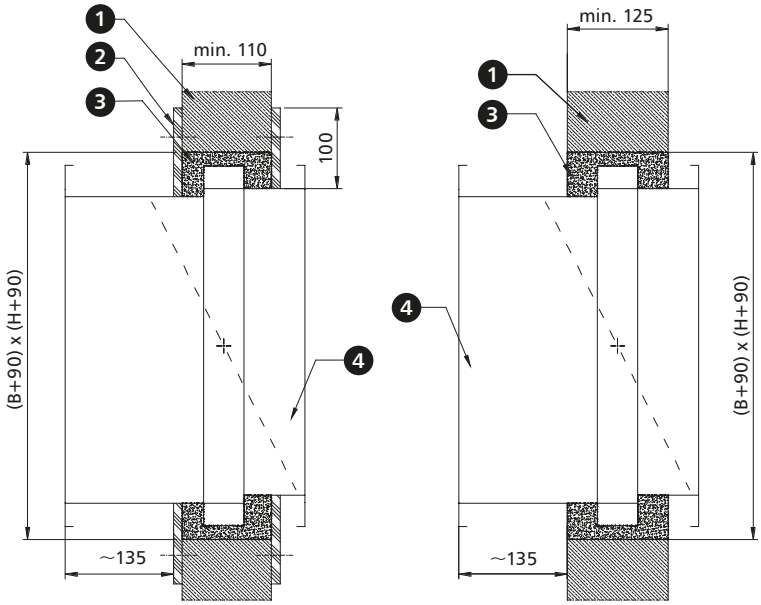

1. rigid wall - concrete, cellular concrete or bricks
2. circumferential band of plaster-cardboard panels
3. sealing - concrete, cement or cement-lime masonry mortar*
4. fire damper mcr FID S

*it is possible to use a different sealing which ensures the required fire resistance

mcr FID S/S p/O damper

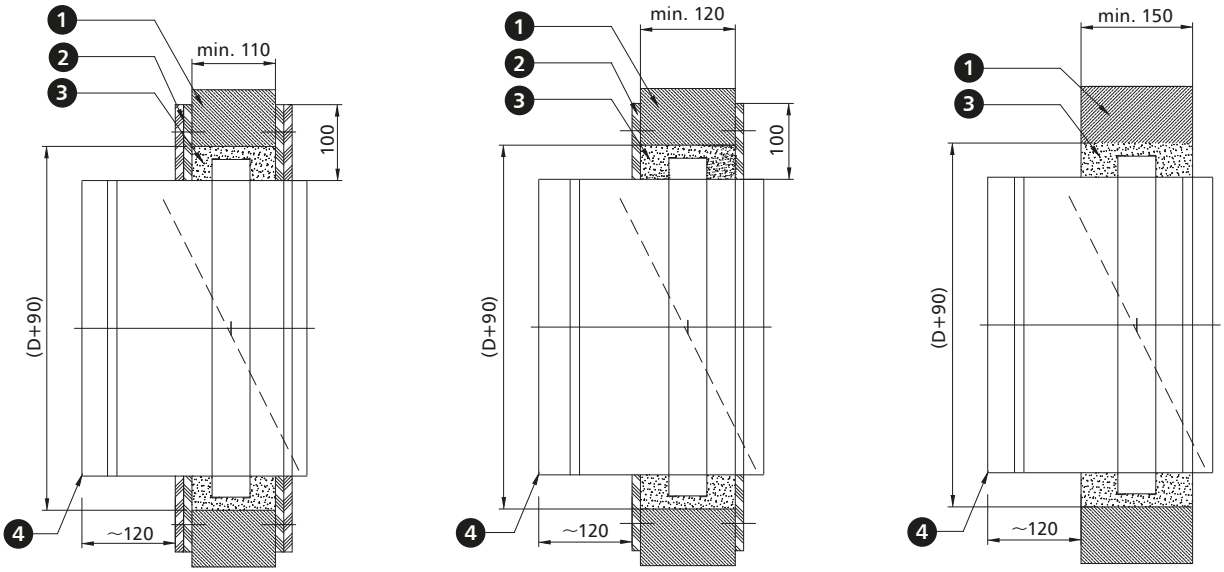

1. rigid wall - concrete, cellular concrete or bricks
2. circumferential band of plaster-cardboard panels
3. sealing - concrete, cement or cement-lime masonry mortar*
4. fire damper mcr FID S

*it is possible to use a different sealing which ensures the required fire resistance

2.5.4. sample installation in ceilings

mcr FID S/S p/P damper

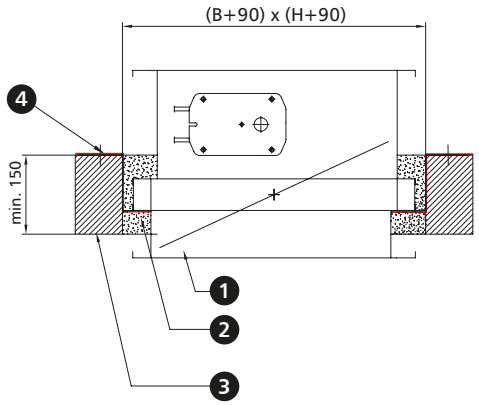

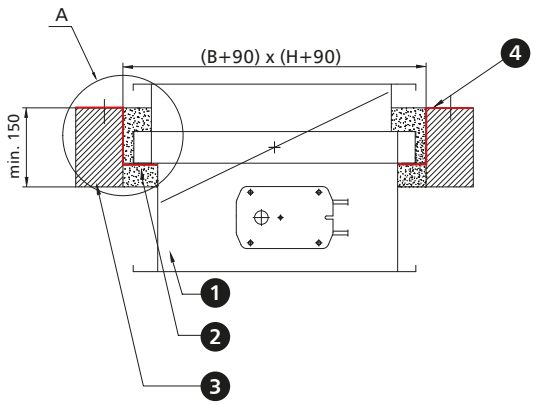

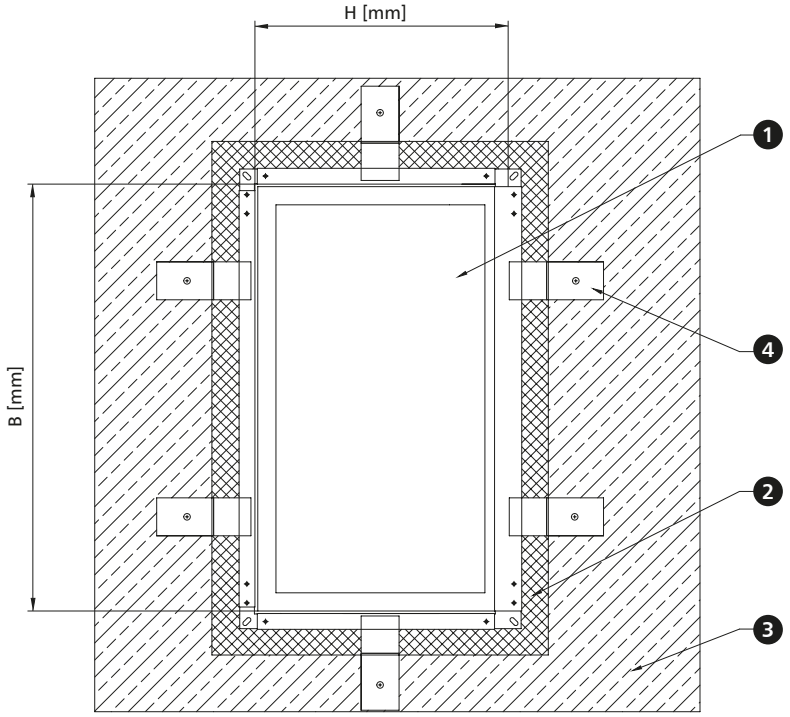

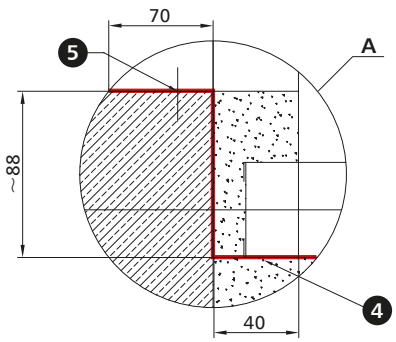

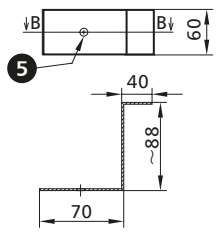

installation profile
g = 3 mm

1. fire damper mcr FID S
2. sealing - concrete, cement or cement-lime masonry mortar*
3. ceiling
4. installation profile g = 3 mm
5. steel expansion plug

* it is possible to use a different sealing which ensures the required fire resistance

mcr FID S/S p/O damper

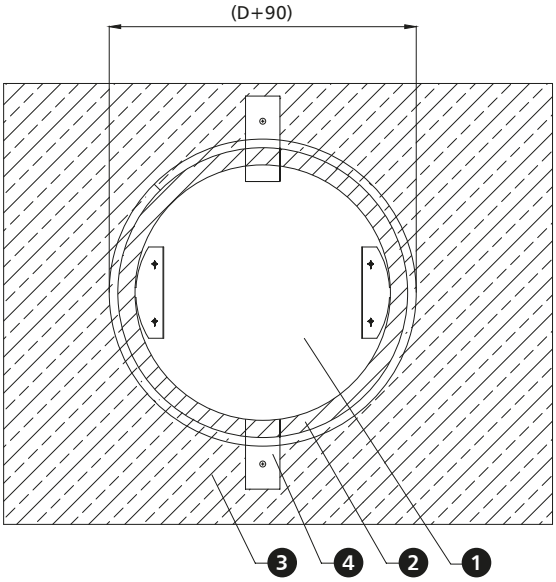

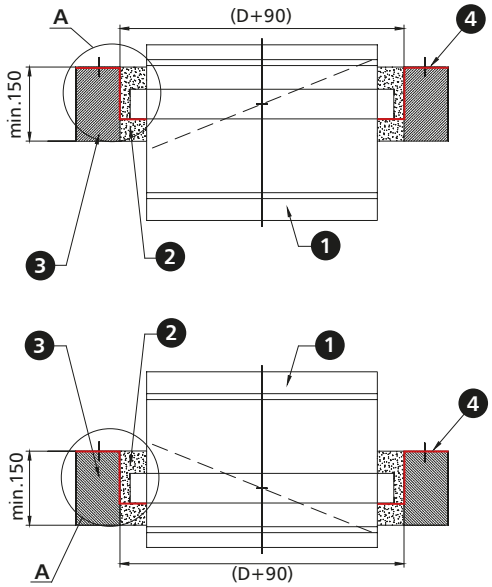

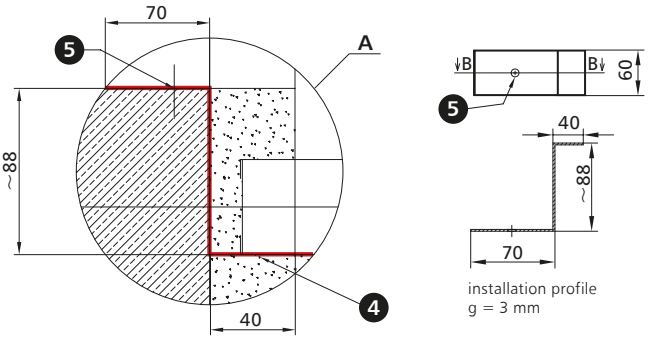

installation profile
g = 3 mm

1. fire damper mcr FID S
2. sealing - concrete, cement or cement-lime masonry mortar*
3. ceiling
4. installation profile g = 3 mm
5. steel expansion plug

* it is possible to use a different sealing which ensures the required fire resistance

2.5.5. sample installation outside the fire partition

mcr FID S/S p/P damper

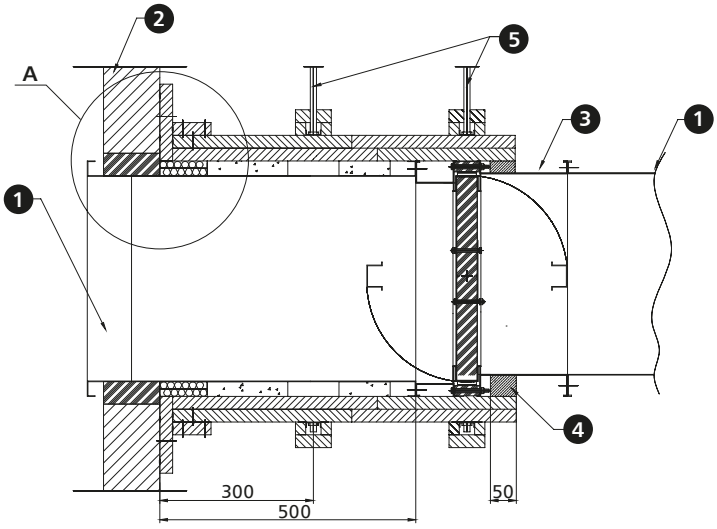

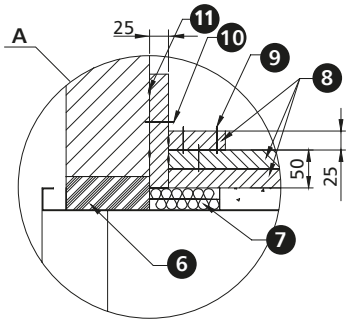

1. ventilation duct
2. rigid wall - concrete, cellular concrete or bricks
3. fire damper mcr FID S
4. gypsum infill
5. duct suspension
6. sealing (cement or cement-lime masonry mortar)*
7. mineral wool with the density of at least 80 kg/m^3, A1 class
8. fire protection material ensuring EI120S fire rating or higher
9. screws 3.5 x 50 at ~150 mm centres
10. steel expansion anchor Ø8 x 80 mm
11. board joints sealed with Conlit Glue

*it is possible to use a different sealing which ensures the required fire resistance

2.5.6. sample module installation

mcr FID S/S p/P damper

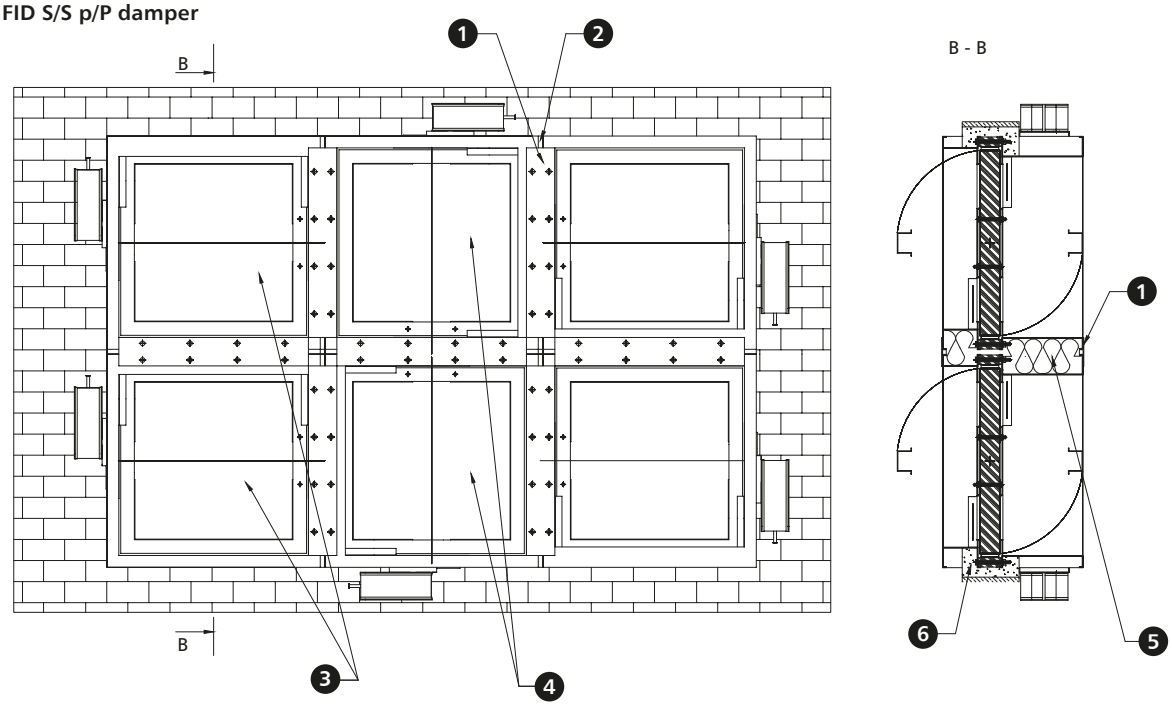

1. installation flat bar, width 60 mm
2. 10 mm gaps between damper flanges
3. damper modules mcr FID S turned by 180°
4. damper modules mcr FID S turned by 90° and 270°
5. fire resistant material, e.g. mineral wool with the density of at least 80 kg/m^3, A1 class
6. sealing - e.g. cement*

*it is possible to use a different sealing which ensures the required fire resistance

Distance between systems and partitions

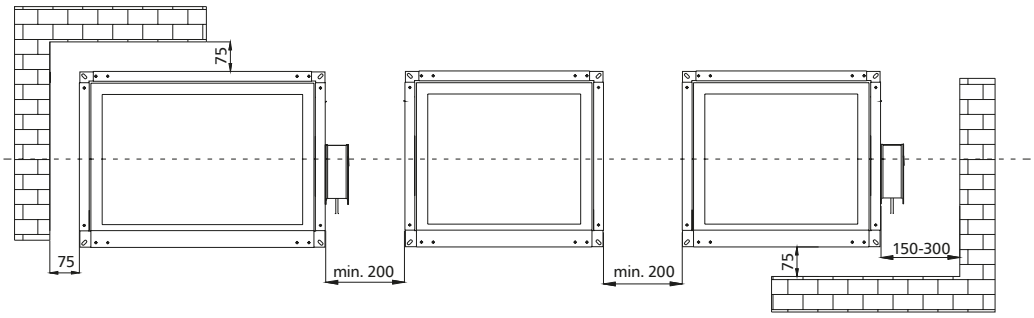

Installation of the damper with a vertical axis of rotation

Such installation must be clearly stated in the draft documentation and mentioned in the order. The dimensions of the damper BxH should be given as to the damper with a horizontal axis of rotation.

2.6.1. technical parameters of mcr FID S/S p/P rectangular dampers

B – nominal width [mm]
H – nominal height [mm]

v – velocity [m/s]
Sk – duct cross-section [m²]
Se – damper active cross-section [m²]

Q – flow [m³/h]
dp – pressure drop [Pa]
L_{WA} – damper noise level [dB]

			height H [mm]														
			200					250					300				
		v [m/s]	Sk [m²]	Se [m²]	Q [m³/h]	dp [Pa]	L_{WA} [dB]	Sk [m²]	Se [m²]	Q [m³/h]	dp [Pa]	L_{WA} [dB]	Sk [m²]	Se [m²]	Q [m³/h]	dp [Pa]	L_{WA} [dB]
width B [mm]	200	4	0.040	0.029	420	8	29	0.050	0.039	564	7	28	0.06	0.049	708	7	29
		6			631	19	40			847	17	40			1 063	16	40
		8			841	34	48			1 129	31	48			1 417	29	48
		10			1 051	54	54			1 411	49	54			1 771	45	54
	250	4	0.050	0.037	526	8	30	0.063	0.049	706	7	29	0.075	0.062	886	7	30
		6			788	19	41			1 058	17	41			1 328	16	41
		8			1 051	34	49			1 411	31	49			1 771	29	49
		10			1 314	54	55			1 764	49	55			2 214	45	54
	300	4	0.060	0.044	631	8	31	0.075	0.059	847	7	30	0.09	0.074	1 063	7	31
		6			946	19	42			1 270	17	42			1 594	16	42
		8			1 261	34	49			1 693	31	49			2 125	28	49
		10			1 577	54	55			2 117	48	55			2 657	45	55
	350	4	0.070	0.051	736	8	31	0.088	0.069	988	7	31	0.105	0.086	1 240	7	32
		6			1 104	19	42			1 482	17	42			1 860	16	42
		8			1 472	34	50			1 976	31	50			2 480	28	50
		10			1 840	53	56			2 470	48	56			3 100	44	56
	400	4	0.080	0.058	841	8	32	0.100	0.078	1 129	7	31	0.12	0.098	1 417	7	32
		6			1 261	19	43			1 693	17	43			2 125	15	42
		8			1 682	34	51			2 258	30	50			2 834	28	50
		10			2 102	53	56			2 822	48	56			3 542	44	56
	450	4	0.090	0.066	946	8	32	0.113	0.088	1 270	7	32	0.135	0.111	1 594	7	33
		6			1 419	19	44			1 905	17	43			2 391	15	43
		8			1 892	33	51			2 540	30	51			3 188	28	51
		10			2 365	53	57			3 175	47	57			3 985	43	56
	500	4	0.100	0.073	1 051	8	33	0.125	0.098	1 411	7	32	0.15	0.123	1 771	6	31
		6			1 577	18	43			2 117	16	43			2 657	15	43
		8			2 102	33	51			2 822	30	51			3 542	27	51
		10			2 628	52	57			3 528	47	57			4 428	43	57
	550	4	0.110	0.080	1 156	8	33	0.138	0.108	1 552	7	33	0.165	0.135	1 948	6	32
		6			1 734	18	44			2 328	16	43			2 922	15	44
		8			2 313	33	52			3 105	29	51			3 897	27	51
		10			2 891	51	57			3 881	46	57			4 871	42	57
	600	4	0.120	0.088	1 261	8	34	0.150	0.118	1 693	7	33	0.18	0.148	2 125	6	32
		6			1 892	18	44			2 540	16	44			3 188	15	44
		8			2 523	32	52			3 387	29	52			4 251	26	51
		10			3 154	51	58			4 234	45	57			5 314	41	57
	650	4	0.130	0.095	1 367	8	34	0.163	0.127	1 835	7	33	0.195	0.160	2 303	6	32
		6			2 050	18	44			2 752	16	44			3 454	14	43
		8			2 733	32	52			3 669	28	51			4 605	26	51
		10			3 416	50	58			4 586	44	57			5 756	40	57
	700	4	0.140	0.102	1 472	7	32	0.175	0.137	1 976	7	34	0.21	0.172	2 480	6	33
		6			2 208	17	44			2 964	15	44			3 720	14	44
		8			2 943	31	52			3 951	28	52			4 959	25	51
		10			3 679	49	58			4 939	44	58			6 199	40	57

2.6.1. technical parameters of mcr FID S/S p/P rectangular dampers

B – nominal width [mm]
H – nominal height [mm]

v – velocity [m/s]
Sk – duct cross-section [m²]
Se – damper active cross-section [m²]

Q – flow [m³/h]
dp – pressure drop [Pa]
L_{WA} – damper noise level [dB]

			height H [mm]														
			200					250					300				
		v [m/s]	Sk [m²]	Se [m²]	Q [m³/h]	dp [Pa]	L_{WA} [dB]	Sk [m²]	Se [m²]	Q [m³/h]	dp [Pa]	L_{WA} [dB]	Sk [m²]	Se [m²]	Q [m³/h]	dp [Pa]	L_{WA} [dB]
width B [mm]	750	4	0.150	0.110	1 577	7	33	0.188	0.147	2 117	6	32	0.225	0.185	2 657	6	33
		6			2 365	17	44			3 175	15	44			3 985	14	44
		8			3 154	31	52			4 234	27	52			5 314	25	52
		10			3 942	48	58			5 292	43	58			6 642	39	57
	800	4	0.160	0.117	1 682	7	33	0.200	0.157	2 258	6	32	0.24	0.197	2 834	6	33
		6			2 523	17	45			3 387	15	44			4 251	13	43
		8			3 364	30	52			4 516	27	52			5 668	24	51
		10			4 205	47	58			5 645	42	58			7 085	38	57
	850	4	0.170	0.124	1 787	7	33	0.213	0.167	2 399	6	33	0.255	0.209	3 011	5	31
		6			2 681	16	44			3 599	14	44			4 517	13	44
		8			3 574	29	52			4 798	26	52			6 022	23	51
		10			4 468	46	58			5 998	41	58			7 528	37	57
	900	4	0.180	0.131	1 892	7	34	0.225	0.176	2 540	6	33	0.27	0.221	3 188	5	31
		6			2 838	16	44			3 810	14	44			4 782	13	44
		8			3 784	29	52			5 080	25	51			6 376	23	51
		10			4 730	45	58			6 350	40	58			7 970	36	57
	1000	4	0.200	0.146	2 102	7	34	0.250	0.196	2 822	6	33	0.3	0.246	3 542	5	32
		6			3 154	15	44			4 234	13	43			5 314	12	43
		8			4 205	28	52			5 645	24	51			7 085	22	51
		10			5 256	43	58			7 056	38	57			8 856	34	57
	1100	4	0.220	0.161	2 313	6	32	0.275	0.216	3 105	5	31	0.33	0.271	3 897	5	32
		6			3 469	15	44			4 657	13	44			5 845	11	43
		8			4 625	26	52			6 209	23	51			7 793	20	50
		10			5 782	41	57			7 762	36	57			9 742	32	56
	1200	4	0.240	0.175	2 523	6	33	0.300	0.235	3 387	5	32	0.36	0.295	4 251	4	30
		6			3 784	14	44			5 080	12	43			6 376	11	43
		8			5 046	25	51			6 774	22	51			8 502	19	50
		10			6 307	39	57			8 467	34	57			10 627	30	56
	1300	4	0.260	0.190	2 733	5	31	0.325	0.255	3 669	5	32	0.39	0.320	4 605	4	30
		6			4 100	13	43			5 504	11	42			6 908	10	42
		8			5 466	23	51			7 338	20	50			9 210	18	50
		10			6 833	37	57			9 173	32	56			11 513	28	55
	1400	4	0.280	0.204	2 943	5	31	0.350	0.274	3 951	4	29	0.42	0.344	4 959	4	30
		6			4 415	12	42			5 927	10	41			7 439	9	41
		8			5 887	22	50			7 903	19	50			9 919	17	49
		10			7 358	35	56			9 878	30	56			12 398	27	55
	1500	4	0.300	0.219	3 154	5	31	0.375	0.294	4 234	4	30	0.45	0.369	5 314	4	31
		6			4 730	12	43			6 350	10	42			7 970	9	41
		8			6 307	21	50			8 467	18	49			10 627	16	49
		10			7 884	33	56			10 584	28	55			13 284	25	55

2.6.1. technical parameters of mcr FID S/S p/P rectangular dampers

B – nominal width [mm]
H – nominal height [mm]

v – velocity [m/s]
Sk – duct cross-section [m²]
Se – damper active cross-section [m²]

Q – flow [m³/h]
dp – pressure drop [Pa]
L_{WA} – damper noise level [dB]

			height H [mm]														
			350					400					450				
		v [m/s]	Sk [m²]	Se [m²]	Q [m³/h]	dp [Pa]	L_{WA} [dB]	Sk [m²]	Se [m²]	Q [m³/h]	dp [Pa]	L_{WA} [dB]	Sk [m²]	Se [m²]	Q [m³/h]	dp [Pa]	L_{WA} [dB]
width B [mm]	200	4	0.070	0.059	852	6	28	0.080	0.069	996	6	29	0.090	0.079	1 140	6	29
		6			1 279	15	40			1 495	14	40			1 711	13	39
		8			1 705	27	48			1 993	25	47			2 281	24	47
		10			2 131	42	53			2 491	40	53			2 851	38	53
	250	4	0.088	0.074	1 066	6	29	0.100	0.087	1 246	6	30	0.113	0.099	1 426	6	30
		6			1 598	15	41			1 868	14	41			2 138	13	40
		8			2 131	27	49			2 491	25	48			2 851	24	48
		10			2 664	42	54			3 114	40	54			3 564	38	54
	300	4	0.105	0.089	1 279	6	30	0.120	0.104	1 495	6	31	0.135	0.119	1 711	6	31
		6			1 918	15	42			2 242	14	42			2 566	13	41
		8			2 557	27	49			2 989	25	49			3 421	24	49
		10			3 197	42	55			3 737	39	55			4 277	37	55
	350	4	0.123	0.104	1 492	6	30	0.140	0.121	1 744	6	31	0.158	0.139	1 996	5	29
		6			2 238	15	42			2 616	14	42			2 994	13	42
		8			2 984	26	50			3 488	25	50			3 992	23	49
		10			3 730	41	56			4 360	39	56			4 990	37	55
	400	4	0.140	0.118	1 705	6	31	0.160	0.138	1 993	6	32	0.180	0.158	2 281	5	30
		6			2 557	14	42			2 989	13	42			3 421	13	42
		8			3 410	26	50			3 986	24	50			4 562	23	50
		10			4 262	41	56			4 982	38	56			5 702	36	56
	450	4	0.158	0.133	1 918	6	32	0.180	0.156	2 242	6	32	0.203	0.178	2 566	5	30
		6			2 877	14	43			3 363	13	42			3 849	13	43
		8			3 836	26	51			4 484	24	50			5 132	23	50
		10			4 795	40	56			5 605	38	56			6 415	36	56
	500	4	0.175	0.148	2 131	6	32	0.200	0.173	2 491	6	33	0.225	0.198	2 851	5	31
		6			3 197	14	43			3 737	13	43			4 277	12	42
		8			4 262	25	51			4 982	24	51			5 702	22	50
		10			5 328	40	57			6 228	37	56			7 128	35	56
	550	4	0.193	0.163	2 557	6	32	0.220	0.190	2 740	5	31	0.248	0.218	3 136	5	31
		6			3 836	14	44			4 110	13	43			4 704	12	43
		8			5 115	25	51			5 481	23	51			6 273	22	51
		10			6 394	39	57			6 851	36	56			7 841	34	56
	600	4	0.210	0.178	2 557	6	33	0.240	0.208	2 989	5	31	0.270	0.238	3 421	5	32
		6			3 836	13	43			4 484	13	44			5 132	12	43
		8			5 115	24	51			5 979	23	51			6 843	21	50
		10			6 394	38	57			7 474	36	57			8 554	34	57
	650	4	0.228	0.192	2 771	6	33	0.260	0.225	3 239	5	31	0.293	0.257	3 707	5	32
		6			4 156	13	43			4 858	12	43			5 560	11	42
		8			5 541	24	51			6 477	22	51			7 413	21	51
		10			6 926	37	57			8 096	35	57			9 266	33	57
	700	4	0.245	0.207	2 984	5	31	0.28	0.242	3 488	5	32	0.315	0.277	3 992	5	32
		6			4 476	13	44			5 232	12	43			5 988	11	43
		8			5 967	23	51			6 975	22	51			7 983	20	50
		10			7 459	37	57			8 719	34	57			9 979	32	57

2.6.1. technical parameters of mcr FID S/S p/P rectangular dampers

B – nominal width [mm]
H – nominal height [mm]

v – velocity [m/s]
Sk – duct cross-section [m²]
Se – damper active cross-section [m²]

Q – flow [m³/h]
dp – pressure drop [Pa]
L_{WA} – damper noise level [dB]

			height H [mm]														
			350					400					450				
		v [m/s]	Sk [m²]	Se [m²]	Q [m³/h]	dp [Pa]	L_{WA} [dB]	Sk [m²]	Se [m²]	Q [m³/h]	dp [Pa]	L_{WA} [dB]	Sk [m²]	Se [m²]	Q [m³/h]	dp [Pa]	L_{WA} [dB]
width B [mm]	750	4	0.263	0.222	3 197	5	31	0.3	0.260	3 737	5	32	0.338	0.297	4 277	5	33
		6			4 795	13	44			5 605	12	44			6 415	11	43
		8			6 394	23	51			7 474	21	51			8 554	20	51
		10			7 992	36	57			9 342	33	57			10 692	31	56
	800	4	0.280	0.237	3 410	5	32	0.32	0.277	3 986	5	32	0.360	0.317	4 562	4	29
		6			5 115	12	43			5 979	11	43			6 843	11	42
		8			6 820	22	51			7 972	21	51			9 124	19	49
		10			8 525	35	57			9 965	32	57			11 405	30	55
	850	4	0.298	0.252	3 623	5	32	0.34	0.294	4 235	5	33	0.383	0.337	4 847	4	29
		6			5 435	12	43			6 353	11	43			7 271	10	41
		8			7 246	22	51			8 470	20	51			9 694	19	49
		10			9 058	34	57			10 588	31	56			12 118	29	55
	900	4	0.315	0.266	3 836	5	32	0.360	0.311	4 484	4	30	0.405	0.356	5 132	4	29
		6			5 754	12	44			6 726	11	43			7 698	10	41
		8			7 672	21	51			8 968	19	50			10 264	18	49
		10			9 590	33	57			11 210	31	57			12 830	29	55
	1000	4	0.350	0.296	4 262	5	33	0.400	0.346	4 982	4	30	0.450	0.396	5 702	4	29
		6			6 394	11	43			7 474	10	42			8 554	9	40
		8			8 525	20	51			9 965	18	50			11 405	17	48
		10			10 656	31	56			12 456	29	56			14 256	27	54
	1100	4	0.385	0.326	4 689	4	30	0.440	0.381	5 481	4	31	0.495	0.436	6 273	4	29
		6			7 033	10	42			8 221	9	41			9 409	9	40
		8			9 377	19	50			10 961	17	50			12 545	16	47
		10			11 722	29	56			13 702	27	56			15 682	25	53
	1200	4	0.420	0.355	5 115	4	31	0.480	0.415	5 979	4	31	0.540	0.475	6 843	3	25
		6			7 672	10	43			8 968	9	42			10 264	8	38
		8			10 230	17	49			11 958	16	49			13 686	15	46
		10			12 787	27	55			14 947	25	55			17 107	23	52
	1300	4	0.455	0.385	5 541	4	31	0.520	0.450	6 477	3	28	0.585	0.515	7 413	3	25
		6			8 312	9	41			9 716	8	41			11 120	8	38
		8			11 082	16	49			12 954	15	49			14 826	14	45
		10			13 853	26	55			16 193	24	55			18 533	22	51
	1400	4	0.490	0.414	5 967	3	27	0.560	0.484	6 975	3	28	0.630	0.554	7 983	3	25
		6			8 951	8	40			10 463	8	41			11 975	7	36
		8			11 935	15	48			13 951	14	48			15 967	13	45
		10			14 918	24	55			17 438	22	54			19 958	20	50
	1500	4	0.525	0.444	6 394	3	28	0.600	0.519	7 474	3	28	0.675	0.594	8 554	3	25
		6			9 590	8	41			11 210	7	40			12 830	6	34
		8			12 787	14	48			14 947	13	48			17 107	12	43
		10			15 984	22	54			18 684	20	53			21 384	19	49

2.6.1. technical parameters of mcr FID S/S p/P rectangular dampers

B – nominal width [mm]
H – nominal height [mm]

v – velocity [m/s]
Sk – duct cross-section [m²]
Se – damper active cross-section [m²]

Q – flow [m³/h]
dp – pressure drop [Pa]
L_{WA} – damper noise level [dB]

			height H [mm]														
			500					550					600				
		v [m/s]	Sk [m²]	Se [m²]	Q [m³/h]	dp [Pa]	L_{WA} [dB]	Sk [m²]	Se [m²]	Q [m³/h]	dp [Pa]	L_{WA} [dB]	Sk [m²]	Se [m²]	Q [m³/h]	dp [Pa]	L_{WA} [dB]
width B [mm]	200	4	0.1	0.089	1 284	5	27	0.110	0.099	1 428	5	28	0.120	0.109	1 572	5	28
		6			1 927	13	40			2 143	12	39			2 359	12	40
		8			2 569	23	47			2 857	22	47			3 145	21	47
		10			3 211	36	53			3 571	35	53			3 931	34	53
	250	4	0.125	0.112	1 606	5	28	0.138	0.124	1 786	5	29	0.150	0.137	1 966	5	29
		6			2 408	13	41			2 678	12	40			2 948	12	41
		8			3 211	23	48			3 571	22	48			3 931	21	48
		10			4 014	36	54			4 464	35	54			4 914	33	54
	300	4	0.15	0.134	1 927	5	29	0.165	0.149	2 143	5	30	0.180	0.164	2 359	5	30
		6			2 890	12	41			3 214	12	41			3 538	11	40
		8			3 853	23	49			4 285	22	49			4 717	21	49
		10			4 817	36	55			5 357	34	55			5 897	33	55
	350	4	0.175	0.156	2 248	5	30	0.193	0.174	2 500	5	30	0.210	0.191	2 752	5	31
		6			3 372	12	41			3 750	12	42			4 128	11	41
		8			4 496	22	49			5 000	21	49			5 504	20	49
		10			5 620	35	55			6 250	34	55			6 880	32	55
	400	4	0.2	0.178	2 569	5	30	0.220	0.198	2 857	5	31	0.240	0.218	3 145	5	31
		6			3 853	12	42			4 285	12	42			4 717	11	42
		8			5 138	22	50			5 714	21	50			6 290	20	49
		10			6 422	35	56			7 142	33	56			7 862	32	56
	450	4	0.225	0.201	2 890	5	31	0.248	0.223	3 214	5	31	0.270	0.246	3 538	5	32
		6			4 335	12	42			4 821	11	42			5 307	11	42
		8			5 780	22	50			6 428	21	50			7 076	20	50
		10			7 225	34	56			8 035	32	56			8 845	31	56
	500	4	0.250	0.223	3 211	5	31	0.275	0.248	3 571	5	32	0.300	0.273	3 931	4	29
		6			4 817	12	43			5 357	11	42			5 897	11	43
		8			6 422	21	50			7 142	20	50			7 862	19	50
		10			8 028	33	56			8 928	32	56			9 828	30	56
	550	4	0.275	0.245	3 853	5	32	0.303	0.273	4 285	5	32	0.330	0.300	4 717	4	30
		6			5 780	11	42			6 428	11	43			7 076	10	42
		8			7 707	21	51			8 571	20	50			9 435	19	50
		10			9 634	33	56			10 714	31	56			11 794	30	56
	600	4	0.3	0.268	3 853	5	32	0.330	0.298	4 285	4	30	0.360	0.328	4 717	4	30
		6			5 780	11	43			6 428	11	43			7 076	10	42
		8			7 707	20	50			8 571	19	50			9 435	18	50
		10			9 634	32	56			10 714	30	56			11 794	29	56
	650	4	0.325	0.290	4 175	5	33	0.358	0.322	4 643	4	30	0.390	0.355	5 111	4	31
		6			6 262	11	43			6 964	10	42			7 666	10	43
		8			8 349	20	51			9 285	19	50			10 221	18	50
		10			10 436	31	56			11 606	30	56			12 776	28	56
	700	4	0.350	0.312	4 496	4	30	0.385	0.347	5 000	4	30	0.420	0.382	5 504	4	31
		6			6 744	11	43			7 500	10	42			8 256	10	43
		8			8 991	19	50			9 999	18	50			11 007	17	50
		10			11 239	30	56			12 499	29	56			13 759	27	56

2.6.1. technical parameters of mcr FID S/S p/P rectangular dampers

B – nominal width [mm]
H – nominal height [mm]

v – velocity [m/s]
Sk – duct cross-section [m²]
Se – damper active cross-section [m²]

Q – flow [m³/h]
dp – pressure drop [Pa]
L_{WA} – damper noise level [dB]

			height H [mm]														
			500					550					600				
		v [m/s]	Sk [m²]	Se [m²]	Q [m³/h]	dp [Pa]	L_{WA} [dB]	Sk [m²]	Se [m²]	Q [m³/h]	dp [Pa]	L_{WA} [dB]	Sk [m²]	Se [m²]	Q [m³/h]	dp [Pa]	L_{WA} [dB]
width B [mm]	750	4	0.375	0.335	4 817	4	30	0.413	0.372	5 357	4	31	0.450	0.410	5 897	4	31
		6			7 225	10	42			8 035	10	43			8 845	9	42
		8			9 634	19	51			10 714	18	50			11 794	17	50
		10			12 042	29	56			13 392	28	56			14 742	27	56
	800	4	0.4	0.357	5 138	4	30	0.440	0.397	5 714	4	31	0.480	0.437	6 290	4	31
		6			7 707	10	42			8 571	9	42			9 435	9	42
		8			10 276	18	50			11 428	17	50			12 580	16	50
		10			12 845	29	56			14 285	27	56			15 725	26	56
	850	4	0.425	0.379	5 459	4	30	0.468	0.422	6 071	4	31	0.510	0.464	6 683	4	32
		6			8 189	10	42			9 107	9	42			10 025	9	42
		8			10 918	18	50			12 142	17	50			13 366	16	50
		10			13 648	28	56			15 178	26	56			16 708	25	56
	900	4	0.45	0.401	5 780	4	30	0.495	0.446	6 428	4	32	0.540	0.491	7 076	3	28
		6			8 670	9	41			9 642	9	42			10 614	8	39
		8			11 560	17	49			12 856	16	50			14 152	15	47
		10			14 450	27	55			16 070	25	55			17 690	24	52
	1000	4	0.5	0.446	6 422	4	30	0.550	0.496	6 428	3	28	0.600	0.546	7 862	3	29
		6			9 634	9	41			9 642	8	41			11 794	8	41
		8			12 845	16	48			12 856	15	49			15 725	14	49
		10			16 056	25	54			16 070	24	55			19 656	23	55
	1100	4	0.55	0.491	7 065	3	27	0.605	0.546	7 857	3	29	0.660	0.601	8 649	3	29
		6			10 597	8	39			11 785	8	41			12 973	7	40
		8			14 129	15	48			15 713	14	49			17 297	13	48
		10			17 662	24	54			19 642	22	55			21 622	21	54
	1200	4	0.6	0.535	7 707	3	27	0.660	0.595	8 571	3	29	0.720	0.655	9 435	3	29
		6			11 560	8	39			12 856	7	40			14 152	7	41
		8			15 414	14	47			17 142	13	48			18 870	12	48
		10			19 267	22	53			21 427	21	54			23 587	20	54
	1300	4	0.65	0.580	8 349	3	27	0.715	0.645	9 285	3	29	0.780	0.710	10 221	2	25
		6			12 524	7	38			13 928	7	40			15 332	6	39
		8			16 698	13	46			18 570	12	47			20 442	11	47
		10			20 873	20	51			23 213	19	53			25 553	18	53
	1400	4	0.7	0.624	8 991	3	27	0.770	0.694	9 999	2	24	0.840	0.764	11 007	2	25
		6			13 487	6	36			14 999	6	39			16 511	6	39
		8			17 983	12	45			19 999	11	47			22 015	10	46
		10			22 478	19	51			24 998	18	53			27 518	17	53
	1500	4	0.75	0.669	9 634	2	21	0.825	0.744	10 714	2	25	0.900	0.819	11 794	2	25
		6			14 450	6	36			16 070	6	39			17 690	5	37
		8			19 267	11	43			21 427	10	46			23 587	10	46
		10			24 084	17	49			26 784	16	52			29 484	15	51

2.6.1. technical parameters of mcr FID S/S p/P rectangular dampers

B – nominal width [mm]
H – nominal height [mm]

v – velocity [m/s]
Sk – duct cross-section [m²]
Se – damper active cross-section [m²]

Q – flow [m³/h]
dp – pressure drop [Pa]
L_{WA} – damper noise level [dB]

			height H [mm]														
			650					700					750				
		v [m/s]	Sk [m²]	Se [m²]	Q [m³/h]	dp [Pa]	L_{WA} [dB]	Sk [m²]	Se [m²]	Q [m³/h]	dp [Pa]	L_{WA} [dB]	Sk [m²]	Se [m²]	Q [m³/h]	dp [Pa]	L_{WA} [dB]
width B [mm]	200	4	0.130	0.119	1 716	5	29	0.140	0.129	1 860	5	29	0.150	0.139	2 004	4	26
		6			2 575	11	39			2 791	11	39			3 007	11	40
		8			3 433	21	47			3 721	20	47			4 009	19	47
		10			4 291	32	53			4 651	31	53			5 011	31	53
	250	4	0.163	0.149	2 146	5	30	0.175	0.162	2 326	5	30	0.188	0.174	2 506	4	27
		6			3 218	11	40			3 488	11	40			3 758	11	41
		8			4 291	20	48			4 651	20	48			5 011	19	48
		10			5 364	32	54			5 814	31	54			6 264	30	54
	300	4	0.195	0.179	2 575	5	30	0.210	0.194	2 791	4	28	0.225	0.209	3 007	4	28
		6			3 862	11	41			4 186	11	41			4 510	10	40
		8			5 149	20	49			5 581	19	48			6 013	19	49
		10			6 437	32	55			6 977	31	55			7 517	30	55
	350	4	0.228	0.209	3 004	5	31	0.245	0.226	3 256	4	29	0.263	0.244	3 508	4	29
		6			4 506	11	41			4 884	11	42			5 262	10	41
		8			6 008	20	49			6 512	19	49			7 016	18	49
		10			7 510	31	55			8 140	30	55			8 770	29	55
	400	4	0.260	0.238	3 433	4	29	0.280	0.258	3 721	4	29	0.300	0.278	4 009	4	30
		6			5 149	11	42			5 581	10	41			6 013	10	41
		8			6 866	19	49			7 442	19	49			8 018	18	49
		10			8 582	31	56			9 302	30	55			10 022	29	55
	450	4	0.293	0.268	3 862	4	29	0.315	0.291	4 186	4	30	0.338	0.313	4 510	4	30
		6			5 793	10	41			6 279	10	42			6 765	10	42
		8			7 724	19	50			8 372	18	49			9 020	18	50
		10			9 655	30	56			10 465	29	56			11 275	28	55
	500	4	0.325	0.298	4 291	4	30	0.350	0.323	4 651	4	30	0.375	0.348	5 011	4	30
		6			6 437	10	42			6 977	10	42			7 517	10	42
		8			8 582	19	50			9 302	18	50			10 022	17	49
		10			10 728	29	56			11 628	28	56			12 528	27	55
	550	4	0.358	0.328	5 149	4	30	0.385	0.355	5 116	4	31	0.413	0.383	5 512	4	31
		6			7 724	10	42			7 674	10	43			8 268	9	41
		8			10 299	18	50			10 233	17	49			11 025	17	50
		10			12 874	29	56			12 791	28	56			13 781	27	56
	600	4	0.390	0.358	5 149	4	31	0.420	0.388	5 581	4	31	0.450	0.418	6 013	4	31
		6			7 724	10	43			8 372	9	42			9 020	9	42
		8			10 299	18	50			11 163	17	50			12 027	16	49
		10			12 874	28	56			13 954	27	56			15 034	26	56
	650	4	0.423	0.387	5 579	4	31	0.455	0.420	6 047	4	31	0.488	0.452	6 515	4	32
		6			8 368	9	42			9 070	9	42			9 772	9	42
		8			11 157	17	50			12 093	17	50			13 029	16	50
		10			13 946	27	56			15 116	26	56			16 286	25	55
	700	4	0.455	0.417	6 008	4	31	0.490	0.452	6 512	4	32	0.525	0.487	7 016	3	28
		6			9 012	9	42			9 768	9	42			10 524	8	41
		8			12 015	17	50			13 023	16	50			14 031	15	49
		10			15 019	26	56			16 279	25	55			17 539	24	55

2.6.1. technical parameters of mcr FID S/S p/P rectangular dampers

B – nominal width [mm]
H – nominal height [mm]

v – velocity [m/s]
Sk – duct cross-section [m²]
Se – damper active cross-section [m²]

Q – flow [m³/h]
dp – pressure drop [Pa]
L_{WA} – damper noise level [dB]

			height H [mm]														
			650					700					750				
		v [m/s]	Sk [m²]	Se [m²]	Q [m³/h]	dp [Pa]	L_{WA} [dB]	Sk [m²]	Se [m²]	Q [m³/h]	dp [Pa]	L_{WA} [dB]	Sk [m²]	Se [m²]	Q [m³/h]	dp [Pa]	L_{WA} [dB]
width B [mm]	750	4	0.488	0.447	6 437	4	32	0.525	0.485	6 977	4	32	0.563	0.522	7 517	3	28
		6			9 655	9	42			10 465	9	42			11 275	8	41
		8			12 874	16	50			13 954	16	50			15 034	15	49
		10			16 092	26	56			17 442	25	56			18 792	24	56
	800	4	0.520	0.477	6 866	4	32	0.560	0.517	7 442	3	26	0.600	0.557	8 018	3	29
		6			10 299	9	42			11 163	8	39			12 027	8	42
		8			13 732	16	50			14 884	15	47			16 036	14	49
		10			17 165	25	55			18 605	24	52			20 045	23	55
	850	4	0.553	0.507	7 295	3	28	0.595	0.549	7 907	3	29	0.638	0.592	8 519	3	29
		6			10 943	8	41			11 861	8	41			12 779	8	42
		8			14 590	15	49			15 814	15	50			17 038	14	49
		10			18 238	24	55			19 768	23	55			21 298	22	55
	900	4	0.585	0.536	7 724	3	28	0.630	0.581	8 372	3	29	0.675	0.626	9 020	3	29
		6			11 586	8	41			12 558	8	42			13 530	7	40
		8			15 448	15	49			16 744	14	49			18 040	13	48
		10			19 310	23	54			20 930	22	55			22 550	21	55
	1000	4	0.650	0.596	8 582	3	28	0.700	0.646	9 302	3	29	0.750	0.696	10 022	3	30
		6			12 874	7	39			13 954	7	40			15 034	7	41
		8			17 165	14	48			18 605	13	49			20 045	13	49
		10			21 456	22	54			23 256	21	55			25 056	20	54
	1100	4	0.715	0.656	9 441	3	28	0.770	0.711	10 233	3	30	0.825	0.766	11 025	3	30
		6			14 161	7	39			15 349	7	41			16 537	6	39
		8			18 881	13	47			20 465	12	48			22 049	12	48
		10			23 602	20	53			25 582	19	54			27 562	18	53
	1200	4	0.780	0.715	10 299	3	28	0.840	0.775	11 163	2	25	0.900	0.835	12 027	2	25
		6			15 448	6	37			16 744	6	39			18 040	6	40
		8			20 598	12	46			22 326	11	47			24 054	11	47
		10			25 747	19	52			27 907	18	54			30 067	17	53
	1300	4	0.845	0.775	11 157	2	23	0.910	0.840	12 093	2	25	0.975	0.905	13 029	2	26
		6			16 736	6	37			18 140	6	40			19 544	5	38
		8			22 314	11	45			24 186	10	46			26 058	10	47
		10			27 893	17	50			30 233	16	52			32 573	16	53
	1400	4	0.910	0.834	12 015	2	23	0.980	0.904	13 023	2	26	1.050	0.974	14 031	2	26
		6			18 023	5	34			19 535	5	38			21 047	5	38
		8			24 031	10	44			26 047	9	45			28 063	9	46
		10			30 038	16	50			32 558	15	52			35 078	14	51
	1500	4	0.975	0.894	12 874	2	23	1.050	0.969	13 954	2	26	1.125	1.044	15 034	2	26
		6			19 310	5	34			20 930	5	38			22 550	4	35
		8			25 747	9	42			27 907	9	45			30 067	8	44
		10			32 184	14	48			34 884	14	51			37 584	13	51

2.6.1. technical parameters of mcr FID S/S p/P rectangular dampers

B – nominal width [mm]
H – nominal height [mm]

v – velocity [m/s]
Sk – duct cross-section [m²]
Se – damper active cross-section [m²]

Q – flow [m³/h]
dp – pressure drop [Pa]
L_{WA} – damper noise level [dB]

			height H [mm]														
			800					850					900				
		v [m/s]	Sk [m²]	Se [m²]	Q [m³/h]	dp [Pa]	L_{WA} [dB]	Sk [m²]	Se [m²]	Q [m³/h]	dp [Pa]	L_{WA} [dB]	Sk [m²]	Se [m²]	Q [m³/h]	dp [Pa]	L_{WA} [dB]
width B [mm]	200	4	0.160	0.149	2 148	4	27	0.170	0.159	2 292	4	27	0.180	0.169	2 436	4	27
		6			3 223	10	39			3 439	10	39			3 655	10	39
		8			4 297	19	47			4 585	18	47			4 873	18	47
		10			5 371	30	53			5 731	29	53			6 091	28	53
	250	4	0.200	0.187	2 686	4	28	0.213	0.199	2 866	4	28	0.225	0.212	3 046	4	28
		6			4 028	10	40			4 298	10	40			4 568	10	40
		8			5 371	19	48			5 731	18	48			6 091	18	48
		10			6 714	29	54			7 164	29	54			7 614	28	54
	300	4	0.240	0.224	3 223	4	29	0.255	0.239	3 439	4	29	0.270	0.254	3 655	4	29
		6			4 834	10	40			5 158	10	41			5 482	10	41
		8			6 445	18	48			6 877	18	48			7 309	17	48
		10			8 057	29	54			8 597	28	54			9 137	27	54
	350	4	0.280	0.261	3 760	4	29	0.298	0.279	4 012	4	30	0.315	0.296	4 264	4	30
		6			5 640	10	41			6 018	10	41			6 396	9	40
		8			7 520	18	49			8 024	17	48			8 528	17	49
		10			9 400	28	55			10 030	28	55			10 660	27	55
	400	4	0.320	0.298	4 297	4	30	0.340	0.318	4 585	4	30	0.360	0.338	4 873	4	30
		6			6 445	10	42			6 877	9	41			7 309	9	41
		8			8 594	18	49			9 170	17	49			9 746	17	49
		10			10 742	28	55			11 462	27	55			12 182	26	55
	450	4	0.360	0.336	4 834	4	30	0.383	0.358	5 158	4	31	0.405	0.381	5 482	4	31
		6			7 251	9	41			7 737	9	41			8 223	9	41
		8			9 668	17	49			10 316	17	49			10 964	16	49
		10			12 085	27	55			12 895	26	55			13 705	26	55
	500	4	0.400	0.373	5 371	4	31	0.425	0.398	5 731	4	31	0.450	0.423	6 091	4	31
		6			8 057	9	41			8 597	9	42			9 137	9	42
		8			10 742	17	50			11 462	16	49			12 182	16	49
		10			13 428	26	55			14 328	26	55			15 228	25	55
	550	4	0.440	0.410	5 908	4	31	0.468	0.438	6 304	4	31	0.495	0.465	6 700	3	28
		6			8 862	9	42			9 456	9	42			10 050	8	41
		8			11 817	16	49			12 609	16	50			13 401	15	49
		10			14 771	26	56			15 761	25	55			16 751	24	55
	600	4	0.480	0.448	6 445	4	32	0.510	0.478	6 877	3	28	0.540	0.508	7 309	3	28
		6			9 668	9	42			10 316	8	41			10 964	8	41
		8			12 891	16	50			13 755	15	49			14 619	15	49
		10			16 114	25	55			17 194	24	55			18 274	24	55
	650	4	0.520	0.485	6 983	3	28	0.553	0.517	7 451	3	28	0.585	0.550	7 919	3	29
		6			10 474	8	41			11 176	8	41			11 878	8	41
		8			13 965	15	49			14 901	15	49			15 837	14	49
		10			17 456	24	55			18 626	24	56			19 796	23	55
	700	4	0.560	0.522	7 520	3	28	0.595	0.557	8 024	3	29	0.630	0.592	8 528	3	29
		6			11 280	8	41			12 036	8	42			12 792	8	42
		8			15 039	15	49			16 047	14	49			17 055	14	49
		10			18 799	24	56			20 059	23	55			21 319	22	55

2.6.1. technical parameters of mcr FID S/S p/P rectangular dampers

B – nominal width [mm]
H – nominal height [mm]

v – velocity [m/s]
Sk – duct cross-section [m²]
Se – damper active cross-section [m²]

Q – flow [m³/h]
dp – pressure drop [Pa]
L_{WA} – damper noise level [dB]

			height H [mm]														
			800					850					900				
		v [m/s]	Sk [m²]	Se [m²]	Q [m³/h]	dp [Pa]	L_{WA} [dB]	Sk [m²]	Se [m²]	Q [m³/h]	dp [Pa]	L_{WA} [dB]	Sk [m²]	Se [m²]	Q [m³/h]	dp [Pa]	L_{WA} [dB]
width B [mm]	750	4	0.600	0.560	8 057	3	29	0.638	0.597	8 597	3	29	0.675	0.635	9 137	3	29
		6			12 085	8	42			12 895	8	42			13 705	7	40
		8			16 114	14	49			17 194	14	49			18 274	14	49
		10			20 142	23	55			21 492	22	55			22 842	21	55
	800	4	0.640	0.597	8 594	3	29	0.680	0.637	9 170	3	29	0.720	0.677	9 746	3	30
		6			12 891	8	42			13 755	7	40			14 619	7	41
		8			17 188	14	49			18 340	13	48			19 492	13	49
		10			21 485	22	55			22 925	21	55			24 365	21	55
	850	4	0.680	0.634	9 131	3	29	0.723	0.677	9 743	3	30	0.765	0.719	10 355	3	30
		6			13 697	7	40			14 615	7	41			15 533	7	41
		8			18 262	13	48			19 486	13	49			20 710	13	49
		10			22 828	21	55			24 358	21	55			25 888	20	55
	900	4	0.720	0.671	9 668	3	30	0.765	0.716	10 316	3	30	0.810	0.761	10 964	3	30
		6			14 502	7	41			15 474	7	41			16 446	7	41
		8			19 336	13	49			20 632	13	49			21 928	12	48
		10			24 170	21	55			25 790	20	55			27 410	19	54
	1000	4	0.800	0.746	10 742	3	30	0.850	0.796	11 462	3	30	0.900	0.846	12 182	2	25
		6			16 114	7	41			17 194	6	39			18 274	6	40
		8			21 485	12	48			22 925	12	48			24 365	11	48
		10			26 856	19	54			28 656	18	54			30 456	18	54
	1100	4	0.880	0.821	11 817	2	25	0.935	0.876	12 609	2	25	0.990	0.931	13 401	2	26
		6			17 725	6	39			18 913	6	40			20 101	6	40
		8			23 633	11	47			25 217	11	48			26 801	10	47
		10			29 542	18	54			31 522	17	53			33 502	16	53
	1200	4	0.960	0.895	12 891	2	26	1.020	0.955	13 755	2	26	1.080	1.015	14 619	2	26
		6			19 336	6	40			20 632	5	38			21 928	5	38
		8			25 782	10	47			27 510	10	47			29 238	9	46
		10			32 227	16	53			34 387	16	53			36 547	15	52
	1300	4	1.040	0.970	13 965	2	26	1.105	1.035	14 901	2	26	1.170	1.100	15 837	2	26
		6			20 948	5	38			22 352	5	38			23 756	5	38
		8			27 930	9	45			29 802	9	46			31 674	9	46
		10			34 913	15	52			37 253	14	52			39 593	14	52
	1400	4	1.120	1.044	15 039	2	26	1.190	1.114	16 047	2	27	1.260	1.184	17 055	2	27
		6			22 559	5	38			24 071	4	36			25 583	4	36
		8			30 079	9	46			32 095	8	45			34 111	8	45
		10			37 598	14	52			40 118	13	51			42 638	13	51
	1500	4	1.200	1.119	16 114	2	27	1.275	1.194	17 194	1	18	1.350	1.269	18 274	1	18
		6			24 170	4	36			25 790	4	36			27 410	4	36
		8			32 227	8	45			34 387	7	43			36 547	7	43
		10			40 284	12	50			42 984	12	50			45 684	11	49

2.6.1. technical parameters of mcr FID S/S p/P rectangular dampers

B – nominal width [mm]
H – nominal height [mm]

v – velocity [m/s]
Sk – duct cross-section [m²]
Se – damper active cross-section [m²]

Q – flow [m³/h]
dp – pressure drop [Pa]
L_{WA} – damper noise level [dB]

			height H [mm]														
			1000					1100					1200				
		v [m/s]	Sk [m²]	Se [m²]	Q [m³/h]	dp [Pa]	L_{WA} [dB]	Sk [m²]	Se [m²]	Q [m³/h]	dp [Pa]	L_{WA} [dB]	Sk [m²]	Se [m²]	Q [m³/h]	dp [Pa]	L_{WA} [dB]
width B [mm]	200	4	0.200	0.189	2 724	4	28	0.220	0.209	3 012	4	28	0.240	0.229	3 300	4	29
		6			4 087	9	38			4 519	9	39			4 951	9	39
		8			5 449	17	47			6 025	16	46			6 601	16	47
		10			6 811	27	53			7 531	26	53			8 251	25	53
	250	4	0.250	0.237	3 406	4	29	0.275	0.262	3 766	4	29	0.300	0.287	4 126	4	30
		6			5 108	9	39			5 648	9	40			6 188	9	40
		8			6 811	17	48			7 531	16	47			8 251	16	48
		10			8 514	27	54			9 414	25	53			10 314	25	54
	300	4	0.300	0.284	4 087	4	30	0.330	0.314	4 519	4	30	0.360	0.344	4 951	3	27
		6			6 130	9	40			6 778	9	41			7 426	8	39
		8			8 173	17	48			9 037	16	48			9 901	15	48
		10			10 217	26	54			11 297	25	54			12 377	24	54
	350	4	0.350	0.331	4 768	4	30	0.385	0.366	5 272	3	27	0.420	0.401	5 776	3	27
		6			7 152	9	41			7 908	8	40			8 664	8	40
		8			9 536	16	48			10 544	15	48			11 552	15	48
		10			11 920	26	55			13 180	24	54			14 440	24	54
	400	4	0.400	0.378	5 449	4	31	0.440	0.418	6 025	3	28	0.480	0.458	6 601	3	28
		6			8 173	9	41			9 037	8	40			9 901	8	41
		8			10 898	16	49			12 050	15	48			13 202	14	48
		10			13 622	25	55			15 062	24	55			16 502	23	54
	450	4	0.450	0.426	6 130	3	28	0.495	0.471	6 778	3	28	0.540	0.516	7 426	3	28
		6			9 195	8	40			10 167	8	41			11 139	8	41
		8			12 260	15	49			13 556	15	49			14 852	14	49
		10			15 325	24	55			16 945	23	55			18 565	22	54
	500	4	0.500	0.473	6 811	3	28	0.550	0.523	7 531	3	28	0.600	0.573	8 251	3	29
		6			10 217	8	41			11 297	8	41			12 377	7	40
		8			13 622	15	49			15 062	14	49			16 502	14	49
		10			17 028	24	55			18 828	23	55			20 628	22	55
	550	4	0.550	0.520	7 492	3	28	0.605	0.575	8 284	3	29	0.660	0.630	9 076	3	29
		6			11 238	8	41			12 426	8	42			13 614	7	40
		8			14 985	15	49			16 569	14	49			18 153	13	48
		10			18 731	23	55			20 711	22	55			22 691	21	55
	600	4	0.600	0.568	8 173	3	29	0.660	0.628	9 037	3	29	0.720	0.688	9 901	3	30
		6			12 260	8	42			13 556	7	40			14 852	7	41
		8			16 347	14	49			18 075	13	48			19 803	13	49
		10			20 434	22	55			22 594	21	55			24 754	20	54
	650	4	0.650	0.615	8 855	3	29	0.715	0.680	9 791	3	30	0.780	0.745	10 727	3	30
		6			13 282	7	40			14 686	7	41			16 090	7	41
		8			17 709	14	49			19 581	13	49			21 453	12	48
		10			22 136	22	55			24 476	21	55			26 816	20	55
	700	4	0.700	0.662	9 536	3	30	0.770	0.732	10 544	3	30	0.840	0.802	11 552	3	30
		6			14 304	7	41			15 816	7	41			17 328	7	41
		8			19 071	13	49			21 087	13	49			23 103	12	48
		10			23 839	21	55			26 359	20	55			28 879	19	54

2.6.1. technical parameters of mcr FID S/S p/P rectangular dampers

B – nominal width [mm]
H – nominal height [mm]

v – velocity [m/s]
Sk – duct cross-section [m²]
Se – damper active cross-section [m²]

Q – flow [m³/h]
dp – pressure drop [Pa]
L_{WA} – damper noise level [dB]

			height H [mm]														
			1000					1100					1200				
		v [m/s]	Sk [m²]	Se [m²]	Q [m³/h]	dp [Pa]	L_{WA} [dB]	Sk [m²]	Se [m²]	Q [m³/h]	dp [Pa]	L_{WA} [dB]	Sk [m²]	Se [m²]	Q [m³/h]	dp [Pa]	L_{WA} [dB]
width B [mm]	750	4	0.750	0.710	10 217	3	30	0.825	0.785	11 297	3	30	0.900	0.860	12 377	3	31
		6			15 325	7	41			16 945	7	41			18 565	6	40
		8			20 434	13	49			22 594	12	48			24 754	12	49
		10			25 542	20	55			28 242	19	54			30 942	18	54
	800	4	0.800	0.757	10 898	3	30	0.880	0.837	12 050	3	31	0.960	0.917	13 202	2	26
		6			16 347	7	41			18 075	6	40			19 803	6	40
		8			21 796	12	48			24 100	12	49			26 404	11	48
		10			27 245	20	55			30 125	19	55			33 005	18	54
	850	4	0.850	0.804	11 579	3	30	0.935	0.889	12 803	2	26	1.020	0.974	14 027	2	26
		6			17 369	6	39			19 205	6	40			21 041	6	40
		8			23 158	12	48			25 606	11	48			28 054	11	48
		10			28 948	19	54			32 008	18	54			35 068	17	54
	900	4	0.900	0.851	12 260	2	25	0.990	0.941	13 556	2	26	1.080	1.031	14 852	2	26
		6			18 390	6	40			20 334	6	40			22 278	6	40
		8			24 520	11	48			27 112	11	48			29 704	10	47
		10			30 650	18	54			33 890	17	54			37 130	16	53
	1000	4	1.000	0.946	13 622	2	26	1.100	1.046	15 062	2	26	1.200	1.146	16 502	2	27
		6			20 434	6	40			22 594	5	38			24 754	5	39
		8			27 245	11	48			30 125	10	47			33 005	9	46
		10			34 056	17	54			37 656	16	53			41 256	15	53
	1100	4	1.100	1.041	14 985	2	26	1.210	1.151	16 569	2	27	1.320	1.261	18 153	2	27
		6			22 477	5	38			24 853	5	39			27 229	5	39
		8			29 969	10	47			33 137	9	46			36 305	9	47
		10			37 462	15	52			41 422	14	52			45 382	14	52
	1200	4	1.200	1.135	16 347	2	27	1.320	1.255	18 075	2	27	1.440	1.375	19 803	2	27
		6			24 520	5	39			27 112	4	36			29 704	4	36
		8			32 694	9	46			36 150	8	45			39 606	8	45
		10			40 867	14	52			45 187	13	51			49 507	13	52
	1300	4	1.300	1.230	17 709	2	27	1.430	1.360	19 581	2	27	1.560	1.490	21 453	1	19
		6			26 564	4	36			29 372	4	36			32 180	4	37
		8			35 418	8	45			39 162	8	45			42 906	7	44
		10			44 273	13	51			48 953	12	51			53 633	11	50
	1400	4	1.400	1.324	19 071	1	18	1.540	1.464	21 087	1	19	1.680	1.604	23 103	1	19
		6			28 607	4	36			31 631	4	37			34 655	3	33
		8			38 143	7	44			42 175	7	44			46 207	6	42
		10			47 678	12	51			52 718	11	50			57 758	10	49
	1500	4	1.500	1.419	20 434	1	19	1.650	1.569	22 594	1	19	1.800	1.719	24 754	1	19
		6			30 650	4	37			33 890	3	33			37 130	3	34
		8			40 867	7	44			45 187	6	42			49 507	6	43
		10			51 084	11	50			56 484	10	49			61 884	9	48

2.6.1. technical parameters of mcr FID S/S p/P rectangular dampers

B – nominal width [mm]
H – nominal height [mm]

v – velocity [m/s]
Sk – duct cross-section [m²]
Se – damper active cross-section [m²]

Q – flow [m³/h]
dp – pressure drop [Pa]
L_{WA} – damper noise level [dB]

			height H [mm]														
			1300					1400					1500				
		v [m/s]	Sk [m²]	Se [m²]	Q [m³/h]	dp [Pa]	L_{WA} [dB]	Sk [m²]	Se [m²]	Q [m³/h]	dp [Pa]	L_{WA} [dB]	Sk [m²]	Se [m²]	Q [m³/h]	dp [Pa]	L_{WA} [dB]
width B [mm]	200	4	0.260	0.249	3 588	3	25	0.280	0.269	3 876	3	26	0.300	0.289	4 164	3	26
		6			5 383	8	38			5 815	8	38			6 247	8	39
		8			7 177	15	46			7 753	15	47			8 329	14	46
		10			8 971	24	52			9 691	23	52			10 411	23	52
	250	4	0.325	0.312	4 486	3	26	0.350	0.337	4 846	3	27	0.375	0.362	4 164	3	27
		6			6 728	8	39			7 268	8	39			6 247	8	40
		8			8 971	15	47			9 691	14	47			8 329	14	47
		10			11 214	24	53			12 114	23	53			10 411	22	53
	300	4	0.390	0.374	5 383	3	27	0.420	0.404	5 815	3	27	0.450	0.434	6 247	3	28
		6			8 074	8	40			8 722	8	40			9 370	8	40
		8			10 765	15	48			11 629	14	47			12 493	14	48
		10			13 457	23	54			14 537	22	53			15 617	22	54
	350	4	0.455	0.436	6 280	3	28	0.490	0.471	6 784	3	28	0.525	0.506	7 288	3	28
		6			9 420	8	40			10 176	8	41			10 932	7	39
		8			12 560	14	48			13 568	14	48			14 576	13	47
		10			15 700	23	54			16 960	22	54			18 220	21	54
	400	4	0.520	0.498	7 177	3	28	0.560	0.538	7 753	3	29	0.600	0.578	8 329	3	29
		6			10 765	8	41			11 629	7	40			12 493	7	40
		8			14 354	14	48			15 506	13	48			16 658	13	48
		10			17 942	22	54			19 382	21	54			20 822	21	54
	450	4	0.585	0.561	8 074	3	29	0.630	0.606	8 722	3	29	0.675	0.651	9 370	3	29
		6			12 111	7	40			13 083	7	40			14 055	7	40
		8			16 148	14	49			17 444	13	48			18 740	13	49
		10			20 185	21	54			21 805	21	54			23 425	20	54
	500	4	0.650	0.623	8 971	3	29	0.700	0.673	9 691	3	30	0.750	0.723	10 411	3	30
		6			13 457	7	40			14 537	7	41			15 617	7	41
		8			17 942	13	48			19 382	13	49			20 822	12	48
		10			22 428	21	55			24 228	20	54			26 028	19	54
	550	4	0.715	0.685	9 868	3	30	0.770	0.740	10 660	3	30	0.825	0.795	11 452	3	30
		6			14 802	7	41			15 990	7	41			17 178	6	39
		8			19 737	13	49			21 321	12	48			22 905	12	48
		10			24 671	20	54			26 651	19	54			28 631	19	54
	600	4	0.780	0.748	10 765	3	30	0.840	0.808	11 629	3	30	0.900	0.868	12 493	2	25
		6			16 148	7	41			17 444	6	39			18 740	6	40
		8			21 531	12	48			23 259	12	48			24 987	11	48
		10			26 914	20	55			29 074	19	54			31 234	18	54
	650	4	0.845	0.810	11 663	3	30	0.910	0.875	12 599	2	25	0.975	0.940	13 535	2	26
		6			17 494	6	39			18 898	6	40			20 302	6	40
		8			23 325	12	48			25 197	11	48			27 069	11	48
		10			29 156	19	54			31 496	18	54			33 836	18	54
	700	4	0.910	0.872	12 560	2	25	0.980	0.942	13 568	2	26	1.050	1.012	14 576	2	26
		6			18 840	6	40			20 352	6	40			21 864	6	40
		8			25 119	11	48			27 135	11	48			29 151	11	48
		10			31 399	18	54			33 919	17	54			36 439	17	54

2.6.1. technical parameters of mcr FID S/S p/P rectangular dampers

B – nominal width [mm]
H – nominal height [mm]

v – velocity [m/s]
Sk – duct cross-section [m²]
Se – damper active cross-section [m²]

Q – flow [m³/h]
dp – pressure drop [Pa]
L_{WA} – damper noise level [dB]

			height H [mm]														
			1300					1400					1500				
		v [m/s]	Sk [m²]	Se [m²]	Q [m³/h]	dp [Pa]	L_{WA} [dB]	Sk [m²]	Se [m²]	Q [m³/h]	dp [Pa]	L_{WA} [dB]	Sk [m²]	Se [m²]	Q [m³/h]	dp [Pa]	L_{WA} [dB]
width B [mm]	750	4	0.975	0.935	13 457	2	26	1.050	1.010	14 537	2	26	1.125	1.085	15 617	2	26
		6			20 185	6	40			21 805	6	40			23 425	6	41
		8			26 914	11	48			29 074	11	48			31 234	10	47
		10			33 642	18	54			36 342	17	54			39 042	16	53
	800	4	1.040	0.997	14 354	2	26	1.120	1.077	15 506	2	26	1.200	1.157	16 658	2	27
		6			21 531	6	40			23 259	6	41			24 987	5	39
		8			28 708	11	48			31 012	10	47			33 316	10	48
		10			35 885	17	54			38 765	16	53			41 645	16	54
	850	4	1.105	1.059	15 251	2	26	1.190	1.144	16 475	2	27	1.275	1.229	17 699	2	27
		6			22 877	6	41			24 713	5	39			26 549	5	39
		8			30 502	10	47			32 950	10	48			35 398	9	47
		10			38 128	16	53			41 188	16	54			44 248	15	53
	900	4	1.170	1.121	16 148	2	27	1.260	1.211	17 444	2	27	1.350	1.301	18 740	2	27
		6			24 222	5	38			26 166	5	39			28 110	5	39
		8			32 296	10	47			34 888	9	46			37 480	9	47
		10			40 370	16	54			43 610	15	53			46 850	14	53
	1000	4	1.300	1.246	17 942	2	27	1.400	1.346	19 382	2	27	1.500	1.446	20 822	2	28
		6			26 914	5	39			29 074	5	39			31 234	4	37
		8			35 885	9	47			38 765	9	47			41 645	8	46
		10			44 856	14	52			48 456	14	53			52 056	13	52
	1100	4	1.430	1.371	19 737	2	27	1.540	1.481	21 321	2	28	1.650	1.591	22 905	1	19
		6			29 605	4	36			31 981	4	37			34 357	4	37
		8			39 473	8	45			42 641	8	46			45 809	7	44
		10			49 342	13	52			53 302	12	51			57 262	12	51
	1200	4	1.560	1.495	21 531	1	19	1.680	1.615	23 259	1	19	1.800	1.735	24 987	1	19
		6			32 296	4	37			34 888	4	37			37 480	4	37
		8			43 062	7	44			46 518	7	44			49 974	7	45
		10			53 827	12	51			58 147	11	50			62 467	11	51
	1300	4	1.690	1.620	23 325	1	19	1.820	1.750	25 197	1	19					
		6			34 988	4	37			37 796	3	34					
		8			46 650	7	44			50 394	6	43					
		10			58 313	11	50			62 993	10	49					
	1400	4	1.820	1.744	25 119	1	19										
		6			37 679	3	34										
		8			50 239	6	43										
		10			62 798	10	49										

The mcr FID S fire damper selection program is available at **www.mercor.com.pl**, in the Designer Zone.

2.6.2. technical parameters of mcr FID S/S p/O circular dampers

D – nominal diameter [mm]
v – velocity [m/s]
Sk – duct cross-section [m²]
Se – damper active cross-section [m²]
Q – flow [m³/h]
dp – pressure drop [Pa]
L_{WA} – damper noise level ę [dB]

D [mm]	v [m/s]	Sk [m²]	Se [m²]	Q [m³/h]	dp [Pa]	L_{WA} [dB]
250	2	0.0491	0.0392	281	1	15
	4			560	4	24
	6			890	8	28
	8			1130	11	33
315	2	0.0779	0.0653	478	1	18
	4			949	4	24
	6			1400	8	30
	8			1880	16	35
355	2	0.0989	0.0847	610	1	17
	4			1 220	5	24
	6			1 830	11	34
	8			2 440	20	40
400	2	0.1256	0.1096	789	1	17
	4			1 578	5	25
	6			2 367	11	34
	8			3 156	10	41

D [mm]	v [m/s]	Sk [m²]	Se [m²]	Q [m³/h]	dp [Pa]	L_{WA} [dB]
450	2	0.1590	0.1410	1 015	1	16
	4			2 030	4	25
	6			3 045	10	35
	8			4 060	18	41
500	2	0.1963	0.1763	1 269	1	18
	4			2 538	4	24
	6			3 807	8	33
	8			5 076	15	40
560	2	0.2462	0.2238	1 611	1	16
	4			3 222	3	24
	6			4 834	7	33
	8			6 445	13	39
630	2	0.3116	0.2864	2 062	1	20
	4			4 124	2	22
	6			6 186	5	33
	8			8 247	9	40

The mcr FID S fire damper selection program is available at **www.mercor.com.pl**, in the Designer Zone.

2.7.1. estimated weights of mcr FID S/S p/P dampers for rectangular ventilation ducts [kg]

height H [mm]	width B [mm]														
	200	250	300	400	500	600	700	800	900	1000	1100	1200	1300	1400	1500
200	9.5	9.7	10	10	15	17	17.5	19	22	25	28	30	33	39	45
250	9.5	10	11	11	16	17.5	18	21	24	27	29	32	34	45	48
300	10	11	11	12	17	20	21	23	26	28	31	34	38	50	51
350	11	11	11	16	18	20.5	23	26	28	29	33	35	36	52	53
400	10	11	12	18	19	21	25	29	30	33	35	36	39	54	55
500	15	16	17	19	20	23	27	32	33	35	38	40	44	55	56
600	17	17.5	20	21	30	26	30	35	37	39	43	48	52	56	58
700	17.5	18	21	23	30	35	35	40	42	44	47	52	54	57	65
800	20	21	22	24	29	35	37	41	43	49	52	57	60	62	78
900	22	25	25	28	33	35	39	43	47	53	56	60	62	64	82
1000	23	29	28	33	36	42	43	49	53	56	59	65	67	69	98
1100	26	30	31	35	38	42	47	56	59	62	63	69	71	73	101
1200	32	33	35	36	40	49	53	56	61	71	72	73	85	86	105
1300	39	40	38	39	44	52	57	59	78	79	80	81	92		
1400	–	–	48	39	48	56	63	65	80	82	85	87			
1500	–	–	50	50	52	58	68	71	82	98	115	120			

For dampers with no actuator, subtract ~1 kg.

2.7.2. estimated weights of mcr FID S/S p/O dampers for circular ventilation ducts [kg]

diameter D [mm]	RST, RST-KW1	actuator
250	7	8
315	9	10
355	12	13
400	14	15
450	15	16
500	16	17
560	18	19
630	20	21

2.8. accesories

2.8.1. mcr KRP connection pipe

The mcr KRP connection pipes are used to connect a circular ventilation duct to a rectangular damper. The connection is a "bare end" pipe. The diameter of the connection pipe is 2 mm smaller than the diameter of the ventilation duct.

Note: due to the asymmetrical position of the fire blade in the damper casing, the connection pipes are of different lengths L, depending on the side of the damper to which they are to be mounted.

The connection pipes are supplied for both sides of the damper.

Dimensions:

BxH - damper dimensions [mm]

ØD - diameter of the connection duct [mm]

L - length [mm] calculated from the formula: H/2-50 for one connection side and H/2-150 for the other connection side

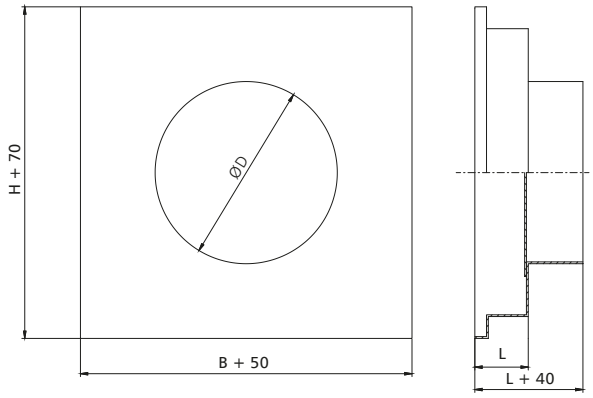

Marking:

mcr KRP / FID S / B x H / DIA / X

- material
- connection duct diameter
- damper dimensions
- type of a damper for which the connection pipe is ordered
- connection pipe

X – material

[no symbol] – galvanised steel, Zn 275 g/m^2 coating
KN – stainless steel
KK – 1.4404 acid-proof steel

2.8.2. casing module with KRW type access

The casing modules with the KRW-type access are made of steel sheet and equipped with connection flanges. The casing features an access opening with a cover. The module enables to access the damper blade or a power transmission system quickly without having to dismantle the damper or the duct on which it is installed.

- KRW P module for rectangular damper

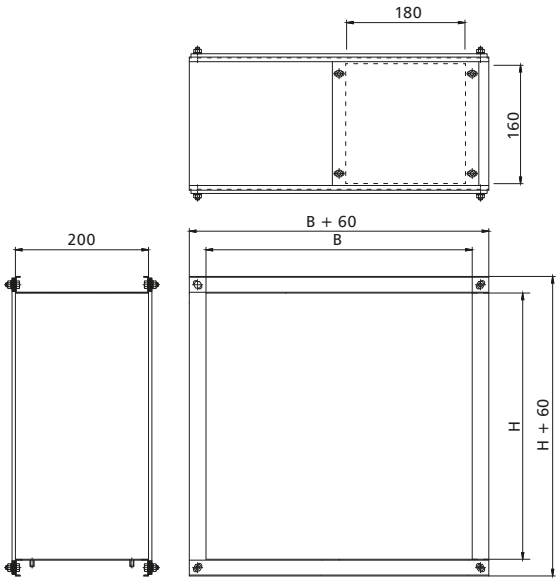

- KRW O/M module
round muff module for nipple damper

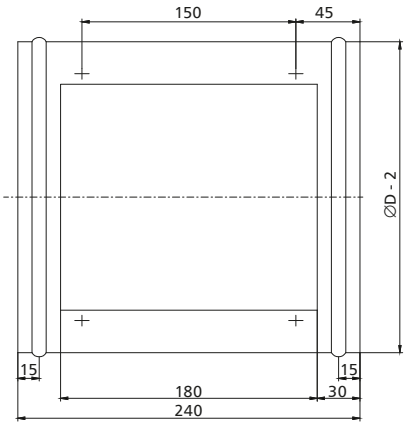

- KRW O/N module
round nipple module for muff damper

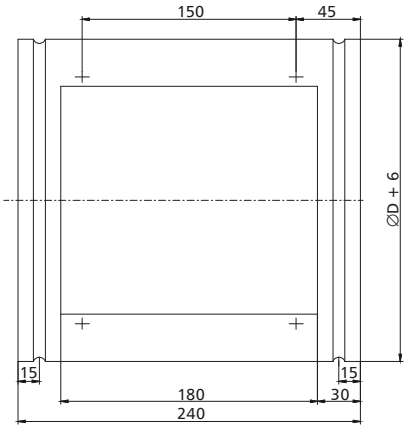

Marking:

mcr KRW ON / FID S / B x H / X

- material
- damper dimensions
- type of a damper for which the module is to be ordered
- rectangular module - mcr KRW P
  round nipple module - mcr KRW ON
  round muff module - mcr KRW OM

X – material

[no symbol] – galvanised steel, Zn 275 g/m^2 coating
KN – stainless steel
KK – 1.4404 acid-proof steel

2.8.3. KP type connection flange

KP type connection flange is used to connect a round fire damper to a duct by means of a connection made according to PN-EN 12220.

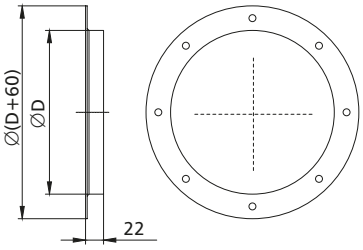

2.9. marking

mcr FID S/S p/P B x H 1 / 2 / 3

- additional parameters
- material
- control
- width x height / diameter (nominal)
- damper type

1 – control:

– RST trigger control mechanism
RST – thermal trigger
RST/WK1 – thermal trigger + limit switch (closed blade signal)
RST/WK2 – thermal trigger + limit switch (open/closed blade signal)

– RST-KW1 trigger control mechanism
RST-KW1/S – thermal trigger
RST-KW1/S/WK2 – thermal trigger + limit switch (open/closed blade signal)
RST-KW1/24I – thermal trigger + "pulse" electromagnetic trigger, U = 24 V DC and a limit switch (closed/open partition signalling)
RST-KW1/24P – thermal trigger + "break" electromagnetic trigger, U = 24 V DC and a limit switch (closed/open partition signalling)
RST-KW1/230I – thermal trigger + "pulse" electromagnetic trigger, U = 230 V AC and a limit switch (closed/open partition signalling)
RST-KW1/230P – thermal trigger + "break" electromagnetic trigger, U = 230 V AC and a limit switch (closed/open partition signalling)

- Belimo trigger control mechanism
BF24-T – actuator with a return spring, U = 24 V AC/DC
BF230-T – actuator with a return spring, U = 230 V AC
BF24TL-T-ST (with the BKN230-24MP option) – actuator with a return spring, U = 24 V, MP Bus digital control
EXBF24-T – explosion proof actuator with a return spring in the Ex version, U = 24 V AC/DC
EXBF230-T – explosion proof actuator with a return spring in the Ex version, U = 230 V AC
BF24-T-ST (with the BKN230-24 option) – actuator with a return spring, for the SBS Control system
BFL24-T – actuator with a return spring, U = 24 V AC/DC
BFL230-T – actuator with a return spring, U = 230 V AC
BFL24-T-ST (with the BKN230-24 option) – actuator with a return spring, for the SBS Control system
BFN24-T – actuator with a return spring, U = 24 V AC/DC
BFN230-T – actuator with a return spring, U = 230 V AC
BFN24-T-ST (with the BKN230-24 option) – actuator with a return spring, for the SBS Control system

2 – material

[no symbol] – galvanised steel, Zn 275 g/m^2 coating
KN – stainless steel
KK – 1.4404 acid-proof steel

3 – additional parameters

Thermoelectric and thermal triggers [no symbol] - trigger for 72°C
ZBAE95 – thermoelectric trigger 95°C
ZBAT95 – thermoelectric trigger for 95°C
T93-95 – thermal trigger for 95°C

Position of the control mechanism (see chapter 14.2 of this Catalogue)
[no symbol] – perpendicular to the axis of damper rotation
WOK – along the axis of damper rotation

Axis of rotation of the damper
[no symbol] - horizontal axis of rotation
PP – vertical axis of rotation
PP_D – vertical axis of rotation – mechanism at the bottom of the damper
PP_G – vertical axis of rotation – mechanism at the top of the damper

Manufacture standard (see chapter 14.2 of this Catalogue)
[no symbol] – right damper
KL – left damper (excl. round dampers)
KO – inverted damper (excl. round dampers)

Extended damper casing
[no symbol] – standard casing length
400 – casing with a length of 400 mm

Connection flange (round dampers only)
[no symbol] – damper without a flange – for the "bare end" connection
KP – damper with a connection flange

* - for round dampers with RST, RST-KW1 mechanisms and BF actuator, the trigger and control mechanism is mounted as standard along the axis of rotation - exception

Note: the additional parameters to be entered preceded by the "/" sign

example marking:

mcr FID S/S p/P 400 x 400 BFL24-T

EIS120 fire cut-off damper with a 24 V compact Belimo actuator with limit switches.

mcr FID S/S p/O Ø400 RST / WK2

EIS120 fire cut-off fire damper with a trigger rated at 72°C and a partition opening and closing limit switch.

Chapter 13 - power supply and control (p. 203) contains:
- technical specifications and connection diagrams for the trigger control mechanisms supporting the damper.

Chapter 14 - additional information (p. 210) contains:
- location of trigger control mechanisms in relation to the damper - production standards,
- table for quick selection of dampers, depending on fire separation and its thickness,
- installation distances: damper-ceiling, damper-wall, damper-damper.

mcr FID S/V p/P
mcr FID S/V-M p/P

single-blade smoke exhaust fire dampers for multi-zone fire ventilation systems

PRODUCT CONFIGURATOR AND CAD MODELS/BIM AT WWW.MERCOR.COM.PL IN THE DESIGNER'S ZONE

BIM CAD

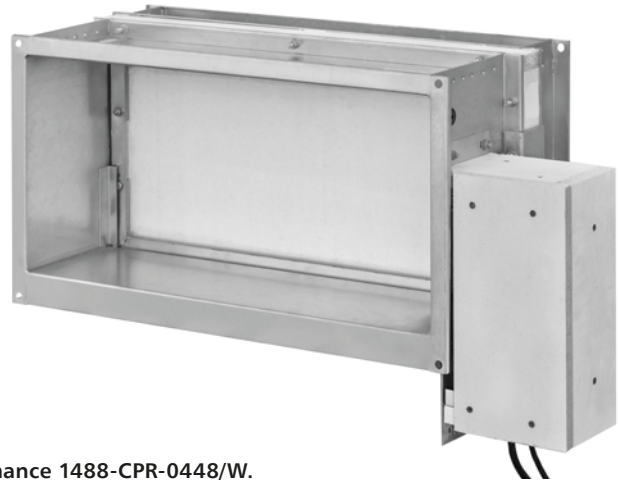

1488-CPR-0448/W

ATEST HIGIENICZNY

CERTYFIKACJA PRODUKTU

- EIS120
- **Certificate of constancy of performance 1488-CPR-0448/W.**
- **Dampers certified for compliance with EN 12101-8.**
- **Dampers qualified under EN 13501-4 and tested under EN 1366-10.**
- **Smoke exhaust dampers with the fire resistance independent of airflow direction and installation side.**

3.1. application

The mcr FID S/V p/P, mcr FID S/V-M p/P smoke exhaust dampers are intended for installation in automatically operated fire ventilation systems. Dampers mcr FID S/V p/P are used in fire ventilation systems, while dampers marked mcr FID S/V-M p/P are used in mixed, fire and comfort ventilation systems. They support both single and multiple fire zones in a building. The devices prevent fire, smoke and fire gases propagation to the adjacent areas. During normal operation, the fire damper is in open or closed position depending on its function. The damper blade opens in the zone on fire and dampers close in other zones.

3.2. design

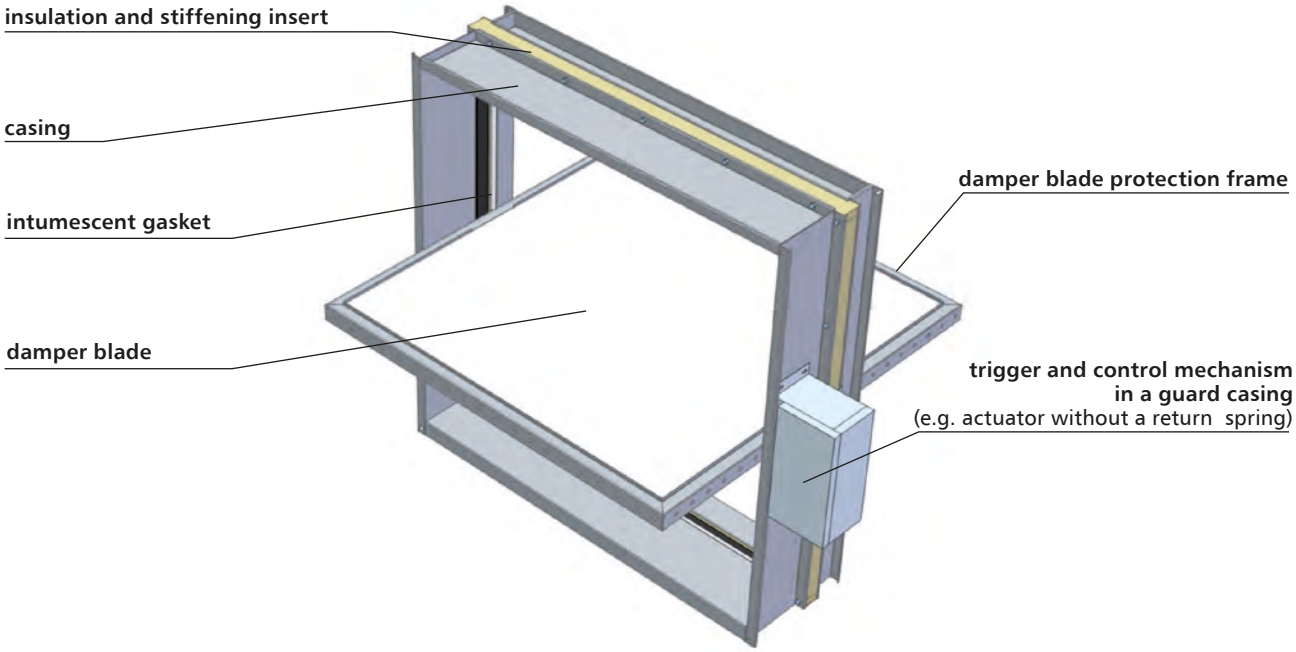

The mcr FID S/V p/P, mcr FID S/V-M p/P smoke exhaust dampers consist of a casing with a rectangular cross-section, made of two segments separated with a fire-proof panel with the cross-section of 20 x 40 mm, a moving damper blade and a remotely activated actuator. Standard damper casing is made of galvanised steel sheet. For chemically aggressive environments, special manufacture casing is used, in which steel elements are made of 1.4404 acid-proof steel sheet, while other elements are impregnated. The casing total length is at least 296 mm. Dampers may be made with an extension element, in which case the casing length is 400 mm.

The damper blade is made of a fire-proof panel with the total thickness of 40 mm, which is covered with a reinforcement steel profile. The inner side of the fire damper casing is equipped with an intumescent gasket. There are stop profiles fastened to the inner casing surface, which limit the rotating motion of the damper blade. The stop shaped are lined with a polyethylene ventilation-grade seal.

3.3. versions

3.3.1. **mcr FID S/V p/P, mcr FID S/V-M p/P** – smoke exhaust fire damper for multi-zone fire ventilation systems with an actuator – damper closing and opening with an actuator

During normal operation, the damper blade of the fire damper remains open or closed. In case of fire, the blade of the damper in the zone on fire opens, while in other zones the damper blades are closed - the dampers are remotely activated by applying the power supply.

The mcr FID S/V p/P, mcr FID S/V-M p/P dampers are equipped with a Belimo trigger control mechanisms **BE** or **BLE** series axial actuator, powered with 24 V AC/DC or 230 V AC. The BLE-series actuators are used in mcr FID S/V p/P dampers with a surface of not more than 0.75 m^2 and in mcr FID S/V-M p/P dampers with a surface of not more than 1.25 m^2.

BE and BLE series actuators are equipped with limit switches used to monitor the blade position. Furthermore, the mechanical position indicator is placed on the actuator.

Dampers with Belimo BE or BLE series actuators close and open when the voltage is applied to the actuator terminals.

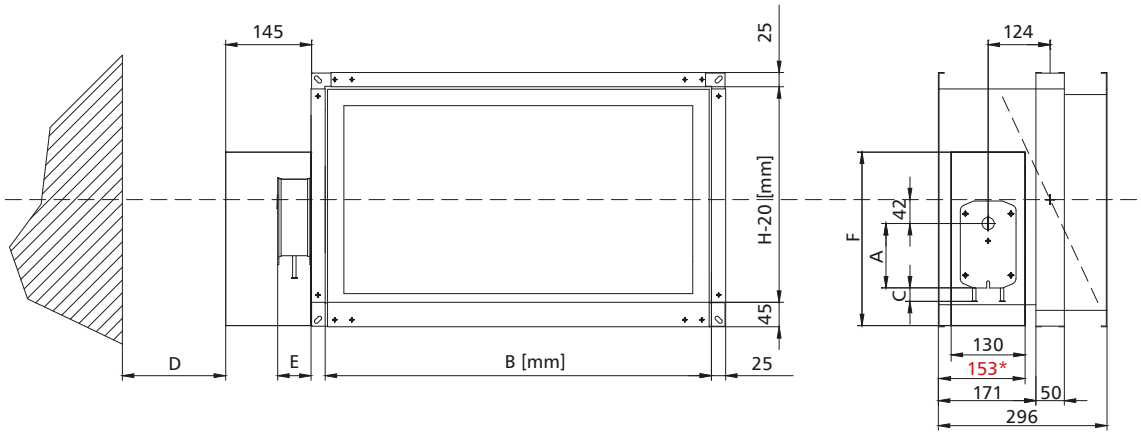

mechanism	A	C	D	E	F
BE	198	10	75	81	345
BLE	130	30	75	70	305
*embedding border					

3.4. dimensions

Rectangular dampers:

- nominal width B: from 200 mm to 1500 mm
- nominal height H: from 200 mm to 1500 mm
- the maximum cross-section surface of one damper up to:
  1.5 m^2 for mcr FID S/V p/P dampers
  1.25 m^2 for mcr FID S/V-M p/P dampers

Apart from the standard dimensions, fire dampers may be manufactured with intermediate dimensions (in 1 mm increments, in the given range).

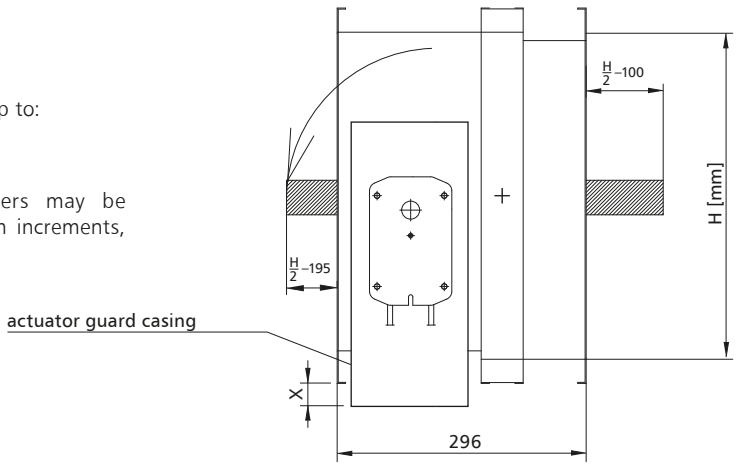

For dampers with a side wall, H<500 mm, the actuator guard casing protrudes above the damper body by value X calculated from the formula $X = 250 - \frac{H}{2}$

3.5. installation

The mcr FID S/V p/P rectangular dampers are EI120(v_{ew} i↔o)S1000C_{300}AAmulti-rated if installed in concrete partitions, partitions made of full bricks or cellular blocks with the thickness of at least 110 mm.

The mcr FID S/V p/P rectangular dampers are EI120(v_{ew} i↔o)S1500C_{10000}AAmulti-rated if installed in concrete partitions made of full bricks or cellular blocks with a thickness of at least 110 mm, lightweight walls made of gypsum cardboard panels on a steel framework with a thickness of min. 125 mm and EI120 or higher fire rating.

3.5.1. preparation of installation openings

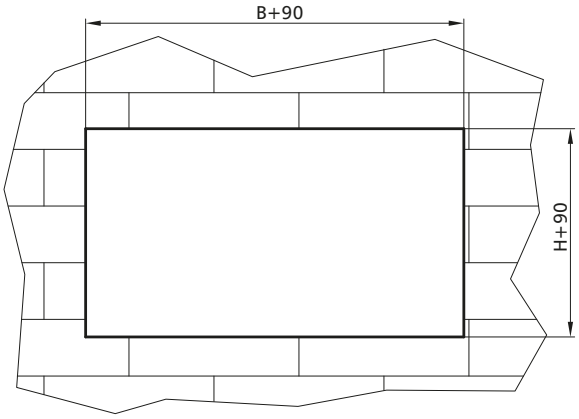

3.5.2. sample installation in concrete and masonry walls

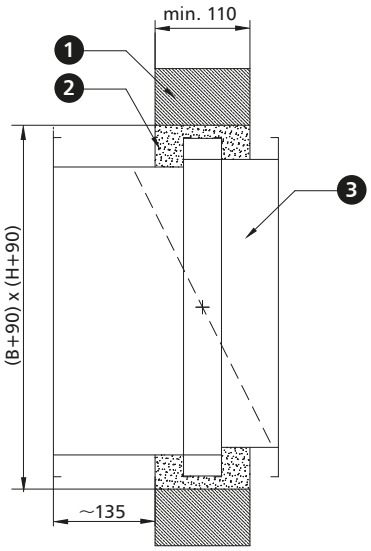

1. rigid wall - concrete, cellular concrete or bricks
2. sealing - concrete, cement or cement-lime masonry mortar*
3. fire damper mcr FID S

*it is possible to use a different sealing which ensures the required fire resistance

3.5.3. sample module installation

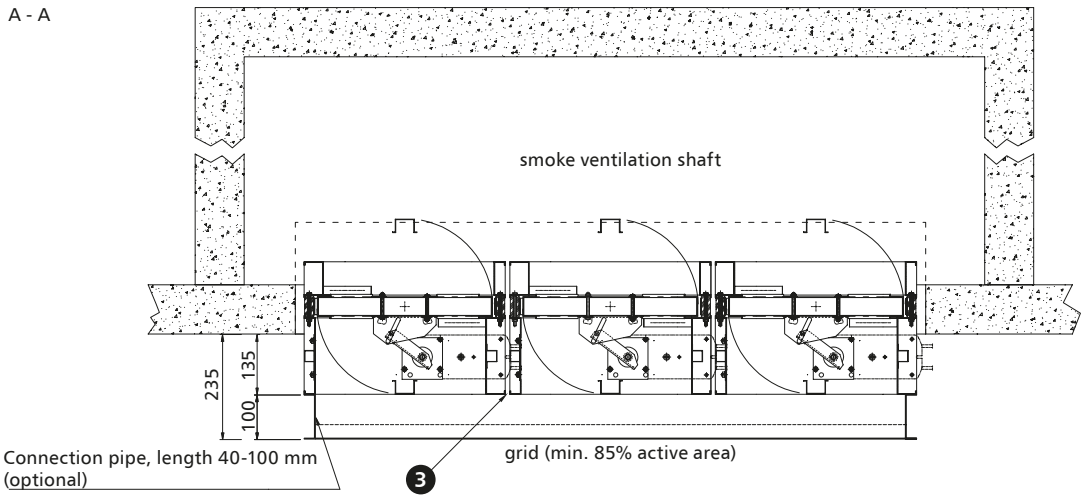

The height of H=400 mm ensures that the partition does not protrude outside the damper casing on the actuator side. To attach a guard grid (grill), a connection piece - length: 40-100 mm is required.

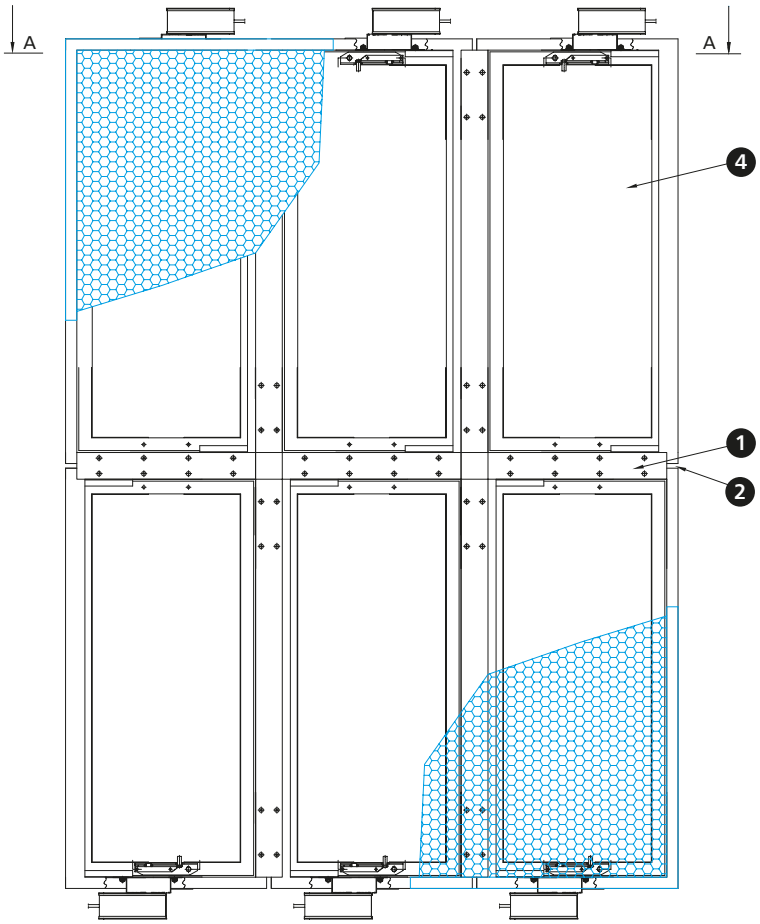

1. installation flat bar, width 60 mm
2. 10 mm gaps between damper module flanges
3. fire resistant material, e.g. mineral wool with the density of at least 80 kg/m^3, A1 class
4. mcr FID S damper module

Distance between systems and partitions

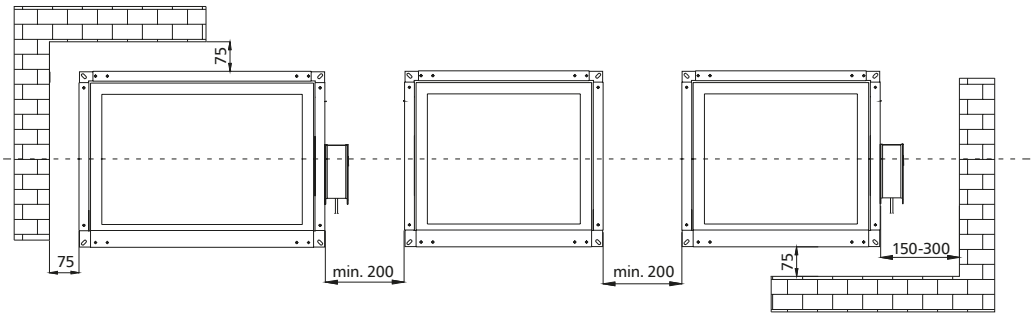

Installation of the damper with a vertical axis of rotation

Such installation must be clearly stated in the draft documentation and mentioned in the order. The dimensions of the damper BxH should be given as to the damper with a horizontal axis of rotation.

3.6. technical parameters of mcr FID S/V p/P, mcr FID S/V-M p/P rectangular dampers

B – nominal width [mm]
H – nominal height [mm]

v – velocity [m/s]
Sk – duct cross-section [m²]
Se – damper active cross-section [m²]

Q – flow [m³/h]
dp – pressure drop [Pa]
L_{WA} – damper noise level [dB]

			height H [mm]														
			200					250					300				
		v [m/s]	Sk [m²]	Se [m²]	Q [m³/h]	dp [Pa]	L_{WA} [dB]	Sk [m²]	Se [m²]	Q [m³/h]	dp [Pa]	L_{WA} [dB]	Sk [m²]	Se [m²]	Q [m³/h]	dp [Pa]	L_{WA} [dB]
width B [mm]	200	4	0.040	0.029	420	8	29	0.050	0.039	564	7	28	0.06	0.049	708	7	29
		6			631	19	40			847	17	40			1 063	16	40
		8			841	34	48			1 129	31	48			1 417	29	48
		10			1 051	54	54			1 411	49	54			1 771	45	54
	250	4	0.050	0.037	526	8	30	0.063	0.049	706	7	29	0.075	0.062	886	7	30
		6			788	19	41			1 058	17	41			1 328	16	41
		8			1 051	34	49			1 411	31	49			1 771	29	49
		10			1 314	54	55			1 764	49	55			2 214	45	54
	300	4	0.060	0.044	631	8	31	0.075	0.059	847	7	30	0.09	0.074	1 063	7	31
		6			946	19	42			1 270	17	42			1 594	16	42
		8			1 261	34	49			1 693	31	49			2 125	28	49
		10			1 577	54	55			2 117	48	55			2 657	45	55
	350	4	0.070	0.051	736	8	31	0.088	0.069	988	7	31	0.105	0.086	1 240	7	32
		6			1 104	19	42			1 482	17	42			1 860	16	42
		8			1 472	34	50			1 976	31	50			2 480	28	50
		10			1 840	53	56			2 470	48	56			3 100	44	56
	400	4	0.080	0.058	841	8	32	0.100	0.078	1 129	7	31	0.12	0.098	1 417	7	32
		6			1 261	19	43			1 693	17	43			2 125	15	42
		8			1 682	34	51			2 258	30	50			2 834	28	50
		10			2 102	53	56			2 822	48	56			3 542	44	56
	450	4	0.090	0.066	946	8	32	0.113	0.088	1 270	7	32	0.135	0.111	1 594	7	33
		6			1 419	19	44			1 905	17	43			2 391	15	43
		8			1 892	33	51			2 540	30	51			3 188	28	51
		10			2 365	53	57			3 175	47	57			3 985	43	56
	500	4	0.100	0.073	1 051	8	33	0.125	0.098	1 411	7	32	0.15	0.123	1 771	6	31
		6			1 577	18	43			2 117	16	43			2 657	15	43
		8			2 102	33	51			2 822	30	51			3 542	27	51
		10			2 628	52	57			3 528	47	57			4 428	43	57
	550	4	0.110	0.080	1 156	8	33	0.138	0.108	1 552	7	33	0.165	0.135	1 948	6	32
		6			1 734	18	44			2 328	16	43			2 922	15	44
		8			2 313	33	52			3 105	29	51			3 897	27	51
		10			2 891	51	57			3 881	46	57			4 871	42	57
	600	4	0.120	0.088	1 261	8	34	0.150	0.118	1 693	7	33	0.18	0.148	2 125	6	32
		6			1 892	18	44			2 540	16	44			3 188	15	44
		8			2 523	32	52			3 387	29	52			4 251	26	51
		10			3 154	51	58			4 234	45	57			5 314	41	57
	650	4	0.130	0.095	1 367	8	34	0.163	0.127	1 835	7	33	0.195	0.160	2 303	6	32
		6			2 050	18	44			2 752	16	44			3 454	14	43
		8			2 733	32	52			3 669	28	51			4 605	26	51
		10			3 416	50	58			4 586	44	57			5 756	40	57
	700	4	0.140	0.102	1 472	7	32	0.175	0.137	1 976	7	34	0.21	0.172	2 480	6	33
		6			2 208	17	44			2 964	15	44			3 720	14	44
		8			2 943	31	52			3 951	28	52			4 959	25	51
		10			3 679	49	58			4 939	44	58			6 199	40	57

3.6. technical parameters of mcr FID S/V p/P, mcr FID S/V-M p/P rectangular dampers

B – nominal width [mm]
H – nominal height [mm]

v – velocity [m/s]
Sk – duct cross-section [m²]
Se – damper active cross-section [m²]

Q – flow [m³/h]
dp – pressure drop [Pa]
L_{WA} – damper noise level [dB]

			height H [mm]														
			350					400					450				
		v [m/s]	Sk [m²]	Se [m²]	Q [m³/h]	dp [Pa]	L_{WA} [dB]	Sk [m²]	Se [m²]	Q [m³/h]	dp [Pa]	L_{WA} [dB]	Sk [m²]	Se [m²]	Q [m³/h]	dp [Pa]	L_{WA} [dB]
width B [mm]	750	4	0.150	0.110	1 577	7	33	0.188	0.147	2 117	6	32	0.225	0.185	2 657	6	33
		6			2 365	17	44			3 175	15	44			3 985	14	44
		8			3 154	31	52			4 234	27	52			5 314	25	52
		10			3 942	48	58			5 292	43	58			6 642	39	57
	800	4	0.160	0.117	1 682	7	33	0.200	0.157	2 258	6	32	0.24	0.197	2 834	6	33
		6			2 523	17	45			3 387	15	44			4 251	13	43
		8			3 364	30	52			4 516	27	52			5 668	24	51
		10			4 205	47	58			5 645	42	58			7 085	38	57
	850	4	0.170	0.124	1 787	7	33	0.213	0.167	2 399	6	33	0.255	0.209	3 011	5	31
		6			2 681	16	44			3 599	14	44			4 517	13	44
		8			3 574	29	52			4 798	26	52			6 022	23	51
		10			4 468	46	58			5 998	41	58			7 528	37	57
	900	4	0.180	0.131	1 892	7	34	0.225	0.176	2 540	6	33	0.27	0.221	3 188	5	31
		6			2 838	16	44			3 810	14	44			4 782	13	44
		8			3 784	29	52			5 080	25	51			6 376	23	51
		10			4 730	45	58			6 350	40	58			7 970	36	57
	1000	4	0.200	0.146	2 102	7	34	0.250	0.196	2 822	6	33	0.3	0.246	3 542	5	32
		6			3 154	15	44			4 234	13	43			5 314	12	43
		8			4 205	28	52			5 645	24	51			7 085	22	51
		10			5 256	43	58			7 056	38	57			8 856	34	57
	1100	4	0.220	0.161	2 313	6	32	0.275	0.216	3 105	5	31	0.33	0.271	3 897	5	32
		6			3 469	15	44			4 657	13	44			5 845	11	43
		8			4 625	26	52			6 209	23	51			7 793	20	50
		10			5 782	41	57			7 762	36	57			9 742	32	56
	1200	4	0.240	0.175	2 523	6	33	0.300	0.235	3 387	5	32	0.36	0.295	4 251	4	30
		6			3 784	14	44			5 080	12	43			6 376	11	43
		8			5 046	25	51			6 774	22	51			8 502	19	50
		10			6 307	39	57			8 467	34	57			10 627	30	56
	1300	4	0.260	0.190	2 733	5	31	0.325	0.255	3 669	5	32	0.39	0.320	4 605	4	30
		6			4 100	13	43			5 504	11	42			6 908	10	42
		8			5 466	23	51			7 338	20	50			9 210	18	50
		10			6 833	37	57			9 173	32	56			11 513	28	55
	1400	4	0.280	0.204	2 943	5	31	0.350	0.274	3 951	4	29	0.42	0.344	4 959	4	30
		6			4 415	12	42			5 927	10	41			7 439	9	41
		8			5 887	22	50			7 903	19	50			9 919	17	49
		10			7 358	35	56			9 878	30	56			12 398	27	55
	1500	4	0.300	0.219	3 154	5	31	0.375	0.294	4 234	4	30	0.45	0.369	5 314	4	31
		6			4 730	12	43			6 350	10	42			7 970	9	41
		8			6 307	21	50			8 467	18	49			10 627	16	49
		10			7 884	33	56			10 584	28	55			13 284	25	55

3.6. technical parameters of mcr FID S/V p/P, mcr FID S/V-M p/P rectangular dampers

B – nominal width [mm]
H – nominal height [mm]

v – velocity [m/s]
Sk – duct cross-section [m²]
Se – damper active cross-section [m²]

Q – flow [m³/h]
dp – pressure drop [Pa]
L_{WA} – damper noise level [dB]

			height H [mm]														
			350					400					450				
		v [m/s]	Sk [m²]	Se [m²]	Q [m³/h]	dp [Pa]	L_{WA} [dB]	Sk [m²]	Se [m²]	Q [m³/h]	dp [Pa]	L_{WA} [dB]	Sk [m²]	Se [m²]	Q [m³/h]	dp [Pa]	L_{WA} [dB]
width B [mm]	200	4	0.070	0.059	852	6	28	0.080	0.069	996	6	29	0.090	0.079	1 140	6	29
		6			1 279	15	40			1 495	14	40			1 711	13	39
		8			1 705	27	48			1 993	25	47			2 281	24	47
		10			2 131	42	53			2 491	40	53			2 851	38	53
	250	4	0.088	0.074	1 066	6	29	0.100	0.087	1 246	6	30	0.113	0.099	1 426	6	30
		6			1 598	15	41			1 868	14	41			2 138	13	40
		8			2 131	27	49			2 491	25	48			2 851	24	48
		10			2 664	42	54			3 114	40	54			3 564	38	54
	300	4	0.105	0.089	1 279	6	30	0.120	0.104	1 495	6	31	0.135	0.119	1 711	6	31
		6			1 918	15	42			2 242	14	42			2 566	13	41
		8			2 557	27	49			2 989	25	49			3 421	24	49
		10			3 197	42	55			3 737	39	55			4 277	37	55
	350	4	0.123	0.104	1 492	6	30	0.140	0.121	1 744	6	31	0.158	0.139	1 996	5	29
		6			2 238	15	42			2 616	14	42			2 994	13	42
		8			2 984	26	50			3 488	25	50			3 992	23	49
		10			3 730	41	56			4 360	39	56			4 990	37	55
	400	4	0.140	0.118	1 705	6	31	0.160	0.138	1 993	6	32	0.180	0.158	2 281	5	30
		6			2 557	14	42			2 989	13	42			3 421	13	42
		8			3 410	26	50			3 986	24	50			4 562	23	50
		10			4 262	41	56			4 982	38	56			5 702	36	56
	450	4	0.158	0.133	1 918	6	32	0.180	0.156	2 242	6	32	0.203	0.178	2 566	5	30
		6			2 877	14	43			3 363	13	42			3 849	13	43
		8			3 836	26	51			4 484	24	50			5 132	23	50
		10			4 795	40	56			5 605	38	56			6 415	36	56
	500	4	0.175	0.148	2 131	6	32	0.200	0.173	2 491	6	33	0.225	0.198	2 851	5	31
		6			3 197	14	43			3 737	13	43			4 277	12	42
		8			4 262	25	51			4 982	24	51			5 702	22	50
		10			5 328	40	57			6 228	37	56			7 128	35	56
	550	4	0.193	0.163	2 557	6	32	0.220	0.190	2 740	5	31	0.248	0.218	3 136	5	31
		6			3 836	14	44			4 110	13	43			4 704	12	43
		8			5 115	25	51			5 481	23	51			6 273	22	51
		10			6 394	39	57			6 851	36	56			7 841	34	56
	600	4	0.210	0.178	2 557	6	33	0.240	0.208	2 989	5	31	0.270	0.238	3 421	5	32
		6			3 836	13	43			4 484	13	44			5 132	12	43
		8			5 115	24	51			5 979	23	51			6 843	21	50
		10			6 394	38	57			7 474	36	57			8 554	34	57
	650	4	0.228	0.192	2 771	6	33	0.260	0.225	3 239	5	31	0.293	0.257	3 707	5	32
		6			4 156	13	43			4 858	12	43			5 560	11	42
		8			5 541	24	51			6 477	22	51			7 413	21	51
		10			6 926	37	57			8 096	35	57			9 266	33	57
	700	4	0.245	0.207	2 984	5	31	0.28	0.242	3 488	5	32	0.315	0.277	3 992	5	32
		6			4 476	13	44			5 232	12	43			5 988	11	43
		8			5 967	23	51			6 975	22	51			7 983	20	50
		10			7 459	37	57			8 719	34	57			9 979	32	57

3.6. technical parameters of mcr FID S/V p/P, mcr FID S/V-M p/P rectangular dampers

B – nominal width [mm]
H – nominal height [mm]

v – velocity [m/s]
Sk – duct cross-section [m²]
Se – damper active cross-section [m²]

Q – flow [m³/h]
dp – pressure drop [Pa]
L_{WA} – damper noise level [dB]

			height H [mm]														
			350					400					450				
		v [m/s]	Sk [m²]	Se [m²]	Q [m³/h]	dp [Pa]	L_{WA} [dB]	Sk [m²]	Se [m²]	Q [m³/h]	dp [Pa]	L_{WA} [dB]	Sk [m²]	Se [m²]	Q [m³/h]	dp [Pa]	L_{WA} [dB]
width B [mm]	750	4	0.263	0.222	3 197	5	31	0.3	0.260	3 737	5	32	0.338	0.297	4 277	5	33
		6			4 795	13	44			5 605	12	44			6 415	11	43
		8			6 394	23	51			7 474	21	51			8 554	20	51
		10			7 992	36	57			9 342	33	57			10 692	31	56
	800	4	0.280	0.237	3 410	5	32	0.32	0.277	3 986	5	32	0.360	0.317	4 562	4	29
		6			5 115	12	43			5 979	11	43			6 843	11	42
		8			6 820	22	51			7 972	21	51			9 124	19	49
		10			8 525	35	57			9 965	32	57			11 405	30	55
	850	4	0.298	0.252	3 623	5	32	0.34	0.294	4 235	5	33	0.383	0.337	4 847	4	29
		6			5 435	12	43			6 353	11	43			7 271	10	41
		8			7 246	22	51			8 470	20	51			9 694	19	49
		10			9 058	34	57			10 588	31	56			12 118	29	55
	900	4	0.315	0.266	3 836	5	32	0.360	0.311	4 484	4	30	0.405	0.356	5 132	4	29
		6			5 754	12	44			6 726	11	43			7 698	10	41
		8			7 672	21	51			8 968	19	50			10 264	18	49
		10			9 590	33	57			11 210	31	57			12 830	29	55
	1000	4	0.350	0.296	4 262	5	33	0.400	0.346	4 982	4	30	0.450	0.396	5 702	4	29
		6			6 394	11	43			7 474	10	42			8 554	9	40
		8			8 525	20	51			9 965	18	50			11 405	17	48
		10			10 656	31	56			12 456	29	56			14 256	27	54
	1100	4	0.385	0.326	4 689	4	30	0.440	0.381	5 481	4	31	0.495	0.436	6 273	4	29
		6			7 033	10	42			8 221	9	41			9 409	9	40
		8			9 377	19	50			10 961	17	50			12 545	16	47
		10			11 722	29	56			13 702	27	56			15 682	25	53
	1200	4	0.420	0.355	5 115	4	31	0.480	0.415	5 979	4	31	0.540	0.475	6 843	3	25
		6			7 672	10	43			8 968	9	42			10 264	8	38
		8			10 230	17	49			11 958	16	49			13 686	15	46
		10			12 787	27	55			14 947	25	55			17 107	23	52
	1300	4	0.455	0.385	5 541	4	31	0.520	0.450	6 477	3	28	0.585	0.515	7 413	3	25
		6			8 312	9	41			9 716	8	41			11 120	8	38
		8			11 082	16	49			12 954	15	49			14 826	14	45
		10			13 853	26	55			16 193	24	55			18 533	22	51
	1400	4	0.490	0.414	5 967	3	27	0.560	0.484	6 975	3	28	0.630	0.554	7 983	3	25
		6			8 951	8	40			10 463	8	41			11 975	7	36
		8			11 935	15	48			13 951	14	48			15 967	13	45
		10			14 918	24	55			17 438	22	54			19 958	20	50
	1500	4	0.525	0.444	6 394	3	28	0.600	0.519	7 474	3	28	0.675	0.594	8 554	3	25
		6			9 590	8	41			11 210	7	40			12 830	6	34
		8			12 787	14	48			14 947	13	48			17 107	12	43
		10			15 984	22	54			18 684	20	53			21 384	19	49

3.6. technical parameters of mcr FID S/V p/P, mcr FID S/V-M p/P rectangular dampers

B – nominal width [mm]
H – nominal height [mm]

v – velocity [m/s]
Sk – duct cross-section [m²]
Se – damper active cross-section [m²]

Q – flow [m³/h]
dp – pressure drop [Pa]
L_{WA} – damper noise level [dB]

			height H [mm]														
			500					550					600				
		v [m/s]	Sk [m²]	Se [m²]	Q [m³/h]	dp [Pa]	L_{WA} [dB]	Sk [m²]	Se [m²]	Q [m³/h]	dp [Pa]	L_{WA} [dB]	Sk [m²]	Se [m²]	Q [m³/h]	dp [Pa]	L_{WA} [dB]
width B [mm]	200	4	0.1	0.089	1 284	5	27	0.110	0.099	1 428	5	28	0.120	0.109	1 572	5	28
		6			1 927	13	40			2 143	12	39			2 359	12	40
		8			2 569	23	47			2 857	22	47			3 145	21	47
		10			3 211	36	53			3 571	35	53			3 931	34	53
	250	4	0.125	0.112	1 606	5	28	0.138	0.124	1 786	5	29	0.150	0.137	1 966	5	29
		6			2 408	13	41			2 678	12	40			2 948	12	41
		8			3 211	23	48			3 571	22	48			3 931	21	48
		10			4 014	36	54			4 464	35	54			4 914	33	54
	300	4	0.15	0.134	1 927	5	29	0.165	0.149	2 143	5	30	0.180	0.164	2 359	5	30
		6			2 890	12	41			3 214	12	41			3 538	11	40
		8			3 853	23	49			4 285	22	49			4 717	21	49
		10			4 817	36	55			5 357	34	55			5 897	33	55
	350	4	0.175	0.156	2 248	5	30	0.193	0.174	2 500	5	30	0.210	0.191	2 752	5	31
		6			3 372	12	41			3 750	12	42			4 128	11	41
		8			4 496	22	49			5 000	21	49			5 504	20	49
		10			5 620	35	55			6 250	34	55			6 880	32	55
	400	4	0.2	0.178	2 569	5	30	0.220	0.198	2 857	5	31	0.240	0.218	3 145	5	31
		6			3 853	12	42			4 285	12	42			4 717	11	42
		8			5 138	22	50			5 714	21	50			6 290	20	49
		10			6 422	35	56			7 142	33	56			7 862	32	56
	450	4	0.225	0.201	2 890	5	31	0.248	0.223	3 214	5	31	0.270	0.246	3 538	5	32
		6			4 335	12	42			4 821	11	42			5 307	11	42
		8			5 780	22	50			6 428	21	50			7 076	20	50
		10			7 225	34	56			8 035	32	56			8 845	31	56
	500	4	0.250	0.223	3 211	5	31	0.275	0.248	3 571	5	32	0.300	0.273	3 931	4	29
		6			4 817	12	43			5 357	11	42			5 897	11	43
		8			6 422	21	50			7 142	20	50			7 862	19	50
		10			8 028	33	56			8 928	32	56			9 828	30	56
	550	4	0.275	0.245	3 853	5	32	0.303	0.273	4 285	5	32	0.330	0.300	4 717	4	30
		6			5 780	11	42			6 428	11	43			7 076	10	42
		8			7 707	21	51			8 571	20	50			9 435	19	50
		10			9 634	33	56			10 714	31	56			11 794	30	56
	600	4	0.3	0.268	3 853	5	32	0.330	0.298	4 285	4	30	0.360	0.328	4 717	4	30
		6			5 780	11	43			6 428	11	43			7 076	10	42
		8			7 707	20	50			8 571	19	50			9 435	18	50
		10			9 634	32	56			10 714	30	56			11 794	29	56
	650	4	0.325	0.290	4 175	5	33	0.358	0.322	4 643	4	30	0.390	0.355	5 111	4	31
		6			6 262	11	43			6 964	10	42			7 666	10	43
		8			8 349	20	51			9 285	19	50			10 221	18	50
		10			10 436	31	56			11 606	30	56			12 776	28	56
	700	4	0.350	0.312	4 496	4	30	0.385	0.347	5 000	4	30	0.420	0.382	5 504	4	31
		6			6 744	11	43			7 500	10	42			8 256	10	43
		8			8 991	19	50			9 999	18	50			11 007	17	50
		10			11 239	30	56			12 499	29	56			13 759	27	56

3.6. technical parameters of mcr FID S/V p/P, mcr FID S/V-M p/P rectangular dampers

B – nominal width [mm]
H – nominal height [mm]

v – velocity [m/s]
Sk – duct cross-section [m²]
Se – damper active cross-section [m²]

Q – flow [m³/h]
dp – pressure drop [Pa]
L_{WA} – damper noise level [dB]

			height H [mm]														
			500					550					600				
		v [m/s]	Sk [m²]	Se [m²]	Q [m³/h]	dp [Pa]	L_{WA} [dB]	Sk [m²]	Se [m²]	Q [m³/h]	dp [Pa]	L_{WA} [dB]	Sk [m²]	Se [m²]	Q [m³/h]	dp [Pa]	L_{WA} [dB]
width B [mm]	750	4	0.375	0.335	4 817	4	30	0.413	0.372	5 357	4	31	0.450	0.410	5 897	4	31
		6			7 225	10	42			8 035	10	43			8 845	9	42
		8			9 634	19	51			10 714	18	50			11 794	17	50
		10			12 042	29	56			13 392	28	56			14 742	27	56
	800	4	0.4	0.357	5 138	4	30	0.440	0.397	5 714	4	31	0.480	0.437	6 290	4	31
		6			7 707	10	42			8 571	9	42			9 435	9	42
		8			10 276	18	50			11 428	17	50			12 580	16	50
		10			12 845	29	56			14 285	27	56			15 725	26	56
	850	4	0.425	0.379	5 459	4	30	0.468	0.422	6 071	4	31	0.510	0.464	6 683	4	32
		6			8 189	10	42			9 107	9	42			10 025	9	42
		8			10 918	18	50			12 142	17	50			13 366	16	50
		10			13 648	28	56			15 178	26	56			16 708	25	56
	900	4	0.45	0.401	5 780	4	30	0.495	0.446	6 428	4	32	0.540	0.491	7 076	3	28
		6			8 670	9	41			9 642	9	42			10 614	8	39
		8			11 560	17	49			12 856	16	50			14 152	15	47
		10			14 450	27	55			16 070	25	55			17 690	24	52
	1000	4	0.5	0.446	6 422	4	30	0.550	0.496	6 428	3	28	0.600	0.546	7 862	3	29
		6			9 634	9	41			9 642	8	41			11 794	8	41
		8			12 845	16	48			12 856	15	49			15 725	14	49
		10			16 056	25	54			16 070	24	55			19 656	23	55
	1100	4	0.55	0.491	7 065	3	27	0.605	0.546	7 857	3	29	0.660	0.601	8 649	3	29
		6			10 597	8	39			11 785	8	41			12 973	7	40
		8			14 129	15	48			15 713	14	49			17 297	13	48
		10			17 662	24	54			19 642	22	55			21 622	21	54
	1200	4	0.6	0.535	7 707	3	27	0.660	0.595	8 571	3	29	0.720	0.655	9 435	3	29
		6			11 560	8	39			12 856	7	40			14 152	7	41
		8			15 414	14	47			17 142	13	48			18 870	12	48
		10			19 267	22	53			21 427	21	54			23 587	20	54
	1300	4	0.65	0.580	8 349	3	27	0.715	0.645	9 285	3	29	0.780	0.710	10 221	2	25
		6			12 524	7	38			13 928	7	40			15 332	6	39
		8			16 698	13	46			18 570	12	47			20 442	11	47
		10			20 873	20	51			23 213	19	53			25 553	18	53
	1400	4	0.7	0.624	8 991	3	27	0.770	0.694	9 999	2	24	0.840	0.764	11 007	2	25
		6			13 487	6	36			14 999	6	39			16 511	6	39
		8			17 983	12	45			19 999	11	47			22 015	10	46
		10			22 478	19	51			24 998	18	53			27 518	17	53
	1500	4	0.75	0.669	9 634	2	21	0.825	0.744	10 714	2	25	0.900	0.819	11 794	2	25
		6			14 450	6	36			16 070	6	39			17 690	5	37
		8			19 267	11	43			21 427	10	46			23 587	10	46
		10			24 084	17	49			26 784	16	52			29 484	15	51

3.6. technical parameters of mcr FID S/V p/P, mcr FID S/V-M p/P rectangular dampers

B – nominal width [mm]
H – nominal height [mm]

v – velocity [m/s]
Sk – duct cross-section [m²]
Se – damper active cross-section [m²]

Q – flow [m³/h]
dp – pressure drop [Pa]
L_{WA} – damper noise level [dB]

			height H [mm]														
			650					700					750				
		v [m/s]	Sk [m²]	Se [m²]	Q [m³/h]	dp [Pa]	L_{WA} [dB]	Sk [m²]	Se [m²]	Q [m³/h]	dp [Pa]	L_{WA} [dB]	Sk [m²]	Se [m²]	Q [m³/h]	dp [Pa]	L_{WA} [dB]
width B [mm]	200	4	0.130	0.119	1 716	5	29	0.140	0.129	1 860	5	29	0.150	0.139	2 004	4	26
		6			2 575	11	39			2 791	11	39			3 007	11	40
		8			3 433	21	47			3 721	20	47			4 009	19	47
		10			4 291	32	53			4 651	31	53			5 011	31	53
	250	4	0.163	0.149	2 146	5	30	0.175	0.162	2 326	5	30	0.188	0.174	2 506	4	27
		6			3 218	11	40			3 488	11	40			3 758	11	41
		8			4 291	20	48			4 651	20	48			5 011	19	48
		10			5 364	32	54			5 814	31	54			6 264	30	54
	300	4	0.195	0.179	2 575	5	30	0.210	0.194	2 791	4	28	0.225	0.209	3 007	4	28
		6			3 862	11	41			4 186	11	41			4 510	10	40
		8			5 149	20	49			5 581	19	48			6 013	19	49
		10			6 437	32	55			6 977	31	55			7 517	30	55
	350	4	0.228	0.209	3 004	5	31	0.245	0.226	3 256	4	29	0.263	0.244	3 508	4	29
		6			4 506	11	41			4 884	11	42			5 262	10	41
		8			6 008	20	49			6 512	19	49			7 016	18	49
		10			7 510	31	55			8 140	30	55			8 770	29	55
	400	4	0.260	0.238	3 433	4	29	0.280	0.258	3 721	4	29	0.300	0.278	4 009	4	30
		6			5 149	11	42			5 581	10	41			6 013	10	41
		8			6 866	19	49			7 442	19	49			8 018	18	49
		10			8 582	31	56			9 302	30	55			10 022	29	55
	450	4	0.293	0.268	3 862	4	29	0.315	0.291	4 186	4	30	0.338	0.313	4 510	4	30
		6			5 793	10	41			6 279	10	42			6 765	10	42
		8			7 724	19	50			8 372	18	49			9 020	18	50
		10			9 655	30	56			10 465	29	56			11 275	28	55
	500	4	0.325	0.298	4 291	4	30	0.350	0.323	4 651	4	30	0.375	0.348	5 011	4	30
		6			6 437	10	42			6 977	10	42			7 517	10	42
		8			8 582	19	50			9 302	18	50			10 022	17	49
		10			10 728	29	56			11 628	28	56			12 528	27	55
	550	4	0.358	0.328	5 149	4	30	0.385	0.355	5 116	4	31	0.413	0.383	5 512	4	31
		6			7 724	10	42			7 674	10	43			8 268	9	41
		8			10 299	18	50			10 233	17	49			11 025	17	50
		10			12 874	29	56			12 791	28	56			13 781	27	56
	600	4	0.390	0.358	5 149	4	31	0.420	0.388	5 581	4	31	0.450	0.418	6 013	4	31
		6			7 724	10	43			8 372	9	42			9 020	9	42
		8			10 299	18	50			11 163	17	50			12 027	16	49
		10			12 874	28	56			13 954	27	56			15 034	26	56
	650	4	0.423	0.387	5 579	4	31	0.455	0.420	6 047	4	31	0.488	0.452	6 515	4	32
		6			8 368	9	42			9 070	9	42			9 772	9	42
		8			11 157	17	50			12 093	17	50			13 029	16	50
		10			13 946	27	56			15 116	26	56			16 286	25	55
	700	4	0.455	0.417	6 008	4	31	0.490	0.452	6 512	4	32	0.525	0.487	7 016	3	28
		6			9 012	9	42			9 768	9	42			10 524	8	41
		8			12 015	17	50			13 023	16	50			14 031	15	49
		10			15 019	26	56			16 279	25	55			17 539	24	55

3.6. technical parameters of mcr FID S/V p/P, mcr FID S/V-M p/P rectangular dampers

B – nominal width [mm]
H – nominal height [mm]

v – velocity [m/s]
Sk – duct cross-section [m²]
Se – damper active cross-section [m²]

Q – flow [m³/h]
dp – pressure drop [Pa]
L_{WA} – damper noise level [dB]

			height H [mm]														
			650					700					750				
		v [m/s]	Sk [m²]	Se [m²]	Q [m³/h]	dp [Pa]	L_{WA} [dB]	Sk [m²]	Se [m²]	Q [m³/h]	dp [Pa]	L_{WA} [dB]	Sk [m²]	Se [m²]	Q [m³/h]	dp [Pa]	L_{WA} [dB]
width B [mm]	750	4	0.488	0.447	6 437	4	32	0.525	0.485	6 977	4	32	0.563	0.522	7 517	3	28
		6			9 655	9	42			10 465	9	42			11 275	8	41
		8			12 874	16	50			13 954	16	50			15 034	15	49
		10			16 092	26	56			17 442	25	56			18 792	24	56
	800	4	0.520	0.477	6 866	4	32	0.560	0.517	7 442	3	26	0.600	0.557	8 018	3	29
		6			10 299	9	42			11 163	8	39			12 027	8	42
		8			13 732	16	50			14 884	15	47			16 036	14	49
		10			17 165	25	55			18 605	24	52			20 045	23	55
	850	4	0.553	0.507	7 295	3	28	0.595	0.549	7 907	3	29	0.638	0.592	8 519	3	29
		6			10 943	8	41			11 861	8	41			12 779	8	42
		8			14 590	15	49			15 814	15	50			17 038	14	49
		10			18 238	24	55			19 768	23	55			21 298	22	55
	900	4	0.585	0.536	7 724	3	28	0.630	0.581	8 372	3	29	0.675	0.626	9 020	3	29
		6			11 586	8	41			12 558	8	42			13 530	7	40
		8			15 448	15	49			16 744	14	49			18 040	13	48
		10			19 310	23	54			20 930	22	55			22 550	21	55
	1000	4	0.650	0.596	8 582	3	28	0.700	0.646	9 302	3	29	0.750	0.696	10 022	3	30
		6			12 874	7	39			13 954	7	40			15 034	7	41
		8			17 165	14	48			18 605	13	49			20 045	13	49
		10			21 456	22	54			23 256	21	55			25 056	20	54
	1100	4	0.715	0.656	9 441	3	28	0.770	0.711	10 233	3	30	0.825	0.766	11 025	3	30
		6			14 161	7	39			15 349	7	41			16 537	6	39
		8			18 881	13	47			20 465	12	48			22 049	12	48
		10			23 602	20	53			25 582	19	54			27 562	18	53
	1200	4	0.780	0.715	10 299	3	28	0.840	0.775	11 163	2	25	0.900	0.835	12 027	2	25
		6			15 448	6	37			16 744	6	39			18 040	6	40
		8			20 598	12	46			22 326	11	47			24 054	11	47
		10			25 747	19	52			27 907	18	54			30 067	17	53
	1300	4	0.845	0.775	11 157	2	23	0.910	0.840	12 093	2	25	0.975	0.905	13 029	2	26
		6			16 736	6	37			18 140	6	40			19 544	5	38
		8			22 314	11	45			24 186	10	46			26 058	10	47
		10			27 893	17	50			30 233	16	52			32 573	16	53
	1400	4	0.910	0.834	12 015	2	23	0.980	0.904	13 023	2	26	1.050	0.974	14 031	2	26
		6			18 023	5	34			19 535	5	38			21 047	5	38
		8			24 031	10	44			26 047	9	45			28 063	9	46
		10			30 038	16	50			32 558	15	52			35 078	14	51
	1500	4	0.975	0.894	12 874	2	23	1.050	0.969	13 954	2	26	1.125	1.044	15 034	2	26
		6			19 310	5	34			20 930	5	38			22 550	4	35
		8			25 747	9	42			27 907	9	45			30 067	8	44
		10			32 184	14	48			34 884	14	51			37 584	13	51

3.6. technical parameters of mcr FID S/V p/P, mcr FID S/V-M p/P rectangular dampers

B – nominal width [mm]
H – nominal height [mm]

v – velocity [m/s]
Sk – duct cross-section [m²]
Se – damper active cross-section [m²]

Q – flow [m³/h]
dp – pressure drop [Pa]
L_{WA} – damper noise level [dB]

			height H [mm]														
			800					850					900				
		v [m/s]	Sk [m²]	Se [m²]	Q [m³/h]	dp [Pa]	L_{WA} [dB]	Sk [m²]	Se [m²]	Q [m³/h]	dp [Pa]	L_{WA} [dB]	Sk [m²]	Se [m²]	Q [m³/h]	dp [Pa]	L_{WA} [dB]
width B [mm]	200	4	0.160	0.149	2 148	4	27	0.170	0.159	2 292	4	27	0.180	0.169	2 436	4	27
		6			3 223	10	39			3 439	10	39			3 655	10	39
		8			4 297	19	47			4 585	18	47			4 873	18	47
		10			5 371	30	53			5 731	29	53			6 091	28	53
	250	4	0.200	0.187	2 686	4	28	0.213	0.199	2 866	4	28	0.225	0.212	3 046	4	28
		6			4 028	10	40			4 298	10	40			4 568	10	40
		8			5 371	19	48			5 731	18	48			6 091	18	48
		10			6 714	29	54			7 164	29	54			7 614	28	54
	300	4	0.240	0.224	3 223	4	29	0.255	0.239	3 439	4	29	0.270	0.254	3 655	4	29
		6			4 834	10	40			5 158	10	41			5 482	10	41
		8			6 445	18	48			6 877	18	48			7 309	17	48
		10			8 057	29	54			8 597	28	54			9 137	27	54
	350	4	0.280	0.261	3 760	4	29	0.298	0.279	4 012	4	30	0.315	0.296	4 264	4	30
		6			5 640	10	41			6 018	10	41			6 396	9	40
		8			7 520	18	49			8 024	17	48			8 528	17	49
		10			9 400	28	55			10 030	28	55			10 660	27	55
	400	4	0.320	0.298	4 297	4	30	0.340	0.318	4 585	4	30	0.360	0.338	4 873	4	30
		6			6 445	10	42			6 877	9	41			7 309	9	41
		8			8 594	18	49			9 170	17	49			9 746	17	49
		10			10 742	28	55			11 462	27	55			12 182	26	55
	450	4	0.360	0.336	4 834	4	30	0.383	0.358	5 158	4	31	0.405	0.381	5 482	4	31
		6			7 251	9	41			7 737	9	41			8 223	9	41
		8			9 668	17	49			10 316	17	49			10 964	16	49
		10			12 085	27	55			12 895	26	55			13 705	26	55
	500	4	0.400	0.373	5 371	4	31	0.425	0.398	5 731	4	31	0.450	0.423	6 091	4	31
		6			8 057	9	41			8 597	9	42			9 137	9	42
		8			10 742	17	50			11 462	16	49			12 182	16	49
		10			13 428	26	55			14 328	26	55			15 228	25	55
	550	4	0.440	0.410	5 908	4	31	0.468	0.438	6 304	4	31	0.495	0.465	6 700	3	28
		6			8 862	9	42			9 456	9	42			10 050	8	41
		8			11 817	16	49			12 609	16	50			13 401	15	49
		10			14 771	26	56			15 761	25	55			16 751	24	55
	600	4	0.480	0.448	6 445	4	32	0.510	0.478	6 877	3	28	0.540	0.508	7 309	3	28
		6			9 668	9	42			10 316	8	41			10 964	8	41
		8			12 891	16	50			13 755	15	49			14 619	15	49
		10			16 114	25	55			17 194	24	55			18 274	24	55
	650	4	0.520	0.485	6 983	3	28	0.553	0.517	7 451	3	28	0.585	0.550	7 919	3	29
		6			10 474	8	41			11 176	8	41			11 878	8	41
		8			13 965	15	49			14 901	15	49			15 837	14	49
		10			17 456	24	55			18 626	24	56			19 796	23	55
	700	4	0.560	0.522	7 520	3	28	0.595	0.557	8 024	3	29	0.630	0.592	8 528	3	29
		6			11 280	8	41			12 036	8	42			12 792	8	42
		8			15 039	15	49			16 047	14	49			17 055	14	49
		10			18 799	24	56			20 059	23	55			21 319	22	55

3.6. technical parameters of mcr FID S/V p/P, mcr FID S/V-M p/P rectangular dampers

B – nominal width [mm]
H – nominal height [mm]

v – velocity [m/s]
Sk – duct cross-section [m²]
Se – damper active cross-section [m²]

Q – flow [m³/h]
dp – pressure drop [Pa]
L_{WA} – damper noise level [dB]

			height H [mm]														
			800					850					900				
		v [m/s]	Sk [m²]	Se [m²]	Q [m³/h]	dp [Pa]	L_{WA} [dB]	Sk [m²]	Se [m²]	Q [m³/h]	dp [Pa]	L_{WA} [dB]	Sk [m²]	Se [m²]	Q [m³/h]	dp [Pa]	L_{WA} [dB]
width B [mm]	750	4	0.600	0.560	8 057	3	29	0.638	0.597	8 597	3	29	0.675	0.635	9 137	3	29
		6			12 085	8	42			12 895	8	42			13 705	7	40
		8			16 114	14	49			17 194	14	49			18 274	14	49
		10			20 142	23	55			21 492	22	55			22 842	21	55
	800	4	0.640	0.597	8 594	3	29	0.680	0.637	9 170	3	29	0.720	0.677	9 746	3	30
		6			12 891	8	42			13 755	7	40			14 619	7	41
		8			17 188	14	49			18 340	13	48			19 492	13	49
		10			21 485	22	55			22 925	21	55			24 365	21	55
	850	4	0.680	0.634	9 131	3	29	0.723	0.677	9 743	3	30	0.765	0.719	10 355	3	30
		6			13 697	7	40			14 615	7	41			15 533	7	41
		8			18 262	13	48			19 486	13	49			20 710	13	49
		10			22 828	21	55			24 358	21	55			25 888	20	55
	900	4	0.720	0.671	9 668	3	30	0.765	0.716	10 316	3	30	0.810	0.761	10 964	3	30
		6			14 502	7	41			15 474	7	41			16 446	7	41
		8			19 336	13	49			20 632	13	49			21 928	12	48
		10			24 170	21	55			25 790	20	55			27 410	19	54
	1000	4	0.800	0.746	10 742	3	30	0.850	0.796	11 462	3	30	0.900	0.846	12 182	2	25
		6			16 114	7	41			17 194	6	39			18 274	6	40
		8			21 485	12	48			22 925	12	48			24 365	11	48
		10			26 856	19	54			28 656	18	54			30 456	18	54
	1100	4	0.880	0.821	11 817	2	25	0.935	0.876	12 609	2	25	0.990	0.931	13 401	2	26
		6			17 725	6	39			18 913	6	40			20 101	6	40
		8			23 633	11	47			25 217	11	48			26 801	10	47
		10			29 542	18	54			31 522	17	53			33 502	16	53
	1200	4	0.960	0.895	12 891	2	26	1.020	0.955	13 755	2	26	1.080	1.015	14 619	2	26
		6			19 336	6	40			20 632	5	38			21 928	5	38
		8			25 782	10	47			27 510	10	47			29 238	9	46
		10			32 227	16	53			34 387	16	53			36 547	15	52
	1300	4	1.040	0.970	13 965	2	26	1.105	1.035	14 901	2	26	1.170	1.100	15 837	2	26
		6			20 948	5	38			22 352	5	38			23 756	5	38
		8			27 930	9	45			29 802	9	46			31 674	9	46
		10			34 913	15	52			37 253	14	52			39 593	14	52
	1400	4	1.120	1.044	15 039	2	26	1.190	1.114	16 047	2	27	1.260	1.184	17 055	2	27
		6			22 559	5	38			24 071	4	36			25 583	4	36
		8			30 079	9	46			32 095	8	45			34 111	8	45
		10			37 598	14	52			40 118	13	51			42 638	13	51
	1500	4	1.200	1.119	16 114	2	27	1.275	1.194	17 194	1	18	1.350	1.269	18 274	1	18
		6			24 170	4	36			25 790	4	36			27 410	4	36
		8			32 227	8	45			34 387	7	43			36 547	7	43
		10			40 284	12	50			42 984	12	50			45 684	11	49

3.6. technical parameters of mcr FID S/V p/P, mcr FID S/V-M p/P rectangular dampers

B – nominal width [mm]
H – nominal height [mm]

v – velocity [m/s]
Sk – duct cross-section [m²]
Se – damper active cross-section [m²]

Q – flow [m³/h]
dp – pressure drop [Pa]
L_{WA} – damper noise level [dB]

			height H [mm]														
			1000					1100					1200				
		v [m/s]	Sk [m²]	Se [m²]	Q [m³/h]	dp [Pa]	L_{WA} [dB]	Sk [m²]	Se [m²]	Q [m³/h]	dp [Pa]	L_{WA} [dB]	Sk [m²]	Se [m²]	Q [m³/h]	dp [Pa]	L_{WA} [dB]
width B [mm]	200	4	0.200	0.189	2 724	4	28	0.220	0.209	3 012	4	28	0.240	0.229	3 300	4	29
		6			4 087	9	38			4 519	9	39			4 951	9	39
		8			5 449	17	47			6 025	16	46			6 601	16	47
		10			6 811	27	53			7 531	26	53			8 251	25	53
	250	4	0.250	0.237	3 406	4	29	0.275	0.262	3 766	4	29	0.300	0.287	4 126	4	30
		6			5 108	9	39			5 648	9	40			6 188	9	40
		8			6 811	17	48			7 531	16	47			8 251	16	48
		10			8 514	27	54			9 414	25	53			10 314	25	54
	300	4	0.300	0.284	4 087	4	30	0.330	0.314	4 519	4	30	0.360	0.344	4 951	3	27
		6			6 130	9	40			6 778	9	41			7 426	8	39
		8			8 173	17	48			9 037	16	48			9 901	15	48
		10			10 217	26	54			11 297	25	54			12 377	24	54
	350	4	0.350	0.331	4 768	4	30	0.385	0.366	5 272	3	27	0.420	0.401	5 776	3	27
		6			7 152	9	41			7 908	8	40			8 664	8	40
		8			9 536	16	48			10 544	15	48			11 552	15	48
		10			11 920	26	55			13 180	24	54			14 440	24	54
	400	4	0.400	0.378	5 449	4	31	0.440	0.418	6 025	3	28	0.480	0.458	6 601	3	28
		6			8 173	9	41			9 037	8	40			9 901	8	41
		8			10 898	16	49			12 050	15	48			13 202	14	48
		10			13 622	25	55			15 062	24	55			16 502	23	54
	450	4	0.450	0.426	6 130	3	28	0.495	0.471	6 778	3	28	0.540	0.516	7 426	3	28
		6			9 195	8	40			10 167	8	41			11 139	8	41
		8			12 260	15	49			13 556	15	49			14 852	14	49
		10			15 325	24	55			16 945	23	55			18 565	22	54
	500	4	0.500	0.473	6 811	3	28	0.550	0.523	7 531	3	28	0.600	0.573	8 251	3	29
		6			10 217	8	41			11 297	8	41			12 377	7	40
		8			13 622	15	49			15 062	14	49			16 502	14	49
		10			17 028	24	55			18 828	23	55			20 628	22	55
	550	4	0.550	0.520	7 492	3	28	0.605	0.575	8 284	3	29	0.660	0.630	9 076	3	29
		6			11 238	8	41			12 426	8	42			13 614	7	40
		8			14 985	15	49			16 569	14	49			18 153	13	48
		10			18 731	23	55			20 711	22	55			22 691	21	55
	600	4	0.600	0.568	8 173	3	29	0.660	0.628	9 037	3	29	0.720	0.688	9 901	3	30
		6			12 260	8	42			13 556	7	40			14 852	7	41
		8			16 347	14	49			18 075	13	48			19 803	13	49
		10			20 434	22	55			22 594	21	55			24 754	20	54
	650	4	0.650	0.615	8 855	3	29	0.715	0.680	9 791	3	30	0.780	0.745	10 727	3	30
		6			13 282	7	40			14 686	7	41			16 090	7	41
		8			17 709	14	49			19 581	13	49			21 453	12	48
		10			22 136	22	55			24 476	21	55			26 816	20	55
	700	4	0.700	0.662	9 536	3	30	0.770	0.732	10 544	3	30	0.840	0.802	11 552	3	30
		6			14 304	7	41			15 816	7	41			17 328	7	41
		8			19 071	13	49			21 087	13	49			23 103	12	48
		10			23 839	21	55			26 359	20	55			28 879	19	54

3.6. technical parameters of mcr FID S/V p/P, mcr FID S/V-M p/P rectangular dampers

B – nominal width [mm]
H – nominal height [mm]

v – velocity [m/s]
Sk – duct cross-section [m²]
Se – damper active cross-section [m²]

Q – flow [m³/h]
dp – pressure drop [Pa]
L_{WA} – damper noise level [dB]

			height H [mm]														
			1000					1100					1200				
		v [m/s]	Sk [m²]	Se [m²]	Q [m³/h]	dp [Pa]	L_{WA} [dB]	Sk [m²]	Se [m²]	Q [m³/h]	dp [Pa]	L_{WA} [dB]	Sk [m²]	Se [m²]	Q [m³/h]	dp [Pa]	L_{WA} [dB]
width B [mm]	750	4	0.750	0.710	10 217	3	30	0.825	0.785	11 297	3	30	0.900	0.860	12 377	3	31
		6			15 325	7	41			16 945	7	41			18 565	6	40
		8			20 434	13	49			22 594	12	48			24 754	12	49
		10			25 542	20	55			28 242	19	54			30 942	18	54
	800	4	0.800	0.757	10 898	3	30	0.880	0.837	12 050	3	31	0.960	0.917	13 202	2	26
		6			16 347	7	41			18 075	6	40			19 803	6	40
		8			21 796	12	48			24 100	12	49			26 404	11	48
		10			27 245	20	55			30 125	19	55			33 005	18	54
	850	4	0.850	0.804	11 579	3	30	0.935	0.889	12 803	2	26	1.020	0.974	14 027	2	26
		6			17 369	6	39			19 205	6	40			21 041	6	40
		8			23 158	12	48			25 606	11	48			28 054	11	48
		10			28 948	19	54			32 008	18	54			35 068	17	54
	900	4	0.900	0.851	12 260	2	25	0.990	0.941	13 556	2	26	1.080	1.031	14 852	2	26
		6			18 390	6	40			20 334	6	40			22 278	6	40
		8			24 520	11	48			27 112	11	48			29 704	10	47
		10			30 650	18	54			33 890	17	54			37 130	16	53
	1000	4	1.000	0.946	13 622	2	26	1.100	1.046	15 062	2	26	1.200	1.146	16 502	2	27
		6			20 434	6	40			22 594	5	38			24 754	5	39
		8			27 245	11	48			30 125	10	47			33 005	9	46
		10			34 056	17	54			37 656	16	53			41 256	15	53
	1100	4	1.100	1.041	14 985	2	26	1.210	1.151	16 569	2	27	1.320	1.261	18 153	2	27
		6			22 477	5	38			24 853	5	39			27 229	5	39
		8			29 969	10	47			33 137	9	46			36 305	9	47
		10			37 462	15	52			41 422	14	52			45 382	14	52
	1200	4	1.200	1.135	16 347	2	27	1.320	1.255	18 075	2	27	1.440	1.375	19 803	2	27
		6			24 520	5	39			27 112	4	36			29 704	4	36
		8			32 694	9	46			36 150	8	45			39 606	8	45
		10			40 867	14	52			45 187	13	51			49 507	13	52
	1300	4	1.300	1.230	17 709	2	27	1.430	1.360	19 581	2	27	1.560	1.490	21 453	1	19
		6			26 564	4	36			29 372	4	36			32 180	4	37
		8			35 418	8	45			39 162	8	45			42 906	7	44
		10			44 273	13	51			48 953	12	51			53 633	11	50
	1400	4	1.400	1.324	19 071	1	18	1.540	1.464	21 087	1	19	1.680	1.604	23 103	1	19
		6			28 607	4	36			31 631	4	37			34 655	3	33
		8			38 143	7	44			42 175	7	44			46 207	6	42
		10			47 678	12	51			52 718	11	50			57 758	10	49
	1500	4	1.500	1.419	20 434	1	19	1.650	1.569	22 594	1	19	1.800	1.719	24 754	1	19
		6			30 650	4	37			33 890	3	33			37 130	3	34
		8			40 867	7	44			45 187	6	42			49 507	6	43
		10			51 084	11	50			56 484	10	49			61 884	9	48

3.6. technical parameters of mcr FID S/V p/P, mcr FID S/V-M p/P rectangular dampers

B – nominal width [mm]
H – nominal height [mm]

v – velocity [m/s]
Sk – duct cross-section [m²]
Se – damper active cross-section [m²]

Q – flow [m³/h]
dp – pressure drop [Pa]
L_{WA} – damper noise level [dB]

			height H [mm]														
			1300					1400					1500				
		v [m/s]	Sk [m²]	Se [m²]	Q [m³/h]	dp [Pa]	L_{WA} [dB]	Sk [m²]	Se [m²]	Q [m³/h]	dp [Pa]	L_{WA} [dB]	Sk [m²]	Se [m²]	Q [m³/h]	dp [Pa]	L_{WA} [dB]
width B [mm]	200	4	0.260	0.249	3 588	3	25	0.280	0.269	3 876	3	26	0.300	0.289	4 164	3	26
		6			5 383	8	38			5 815	8	38			6 247	8	39
		8			7 177	15	46			7 753	15	47			8 329	14	46
		10			8 971	24	52			9 691	23	52			10 411	23	52
	250	4	0.325	0.312	4 486	3	26	0.350	0.337	4 846	3	27	0.375	0.362	4 164	3	27
		6			6 728	8	39			7 268	8	39			6 247	8	40
		8			8 971	15	47			9 691	14	47			8 329	14	47
		10			11 214	24	53			12 114	23	53			10 411	22	53
	300	4	0.390	0.374	5 383	3	27	0.420	0.404	5 815	3	27	0.450	0.434	6 247	3	28
		6			8 074	8	40			8 722	8	40			9 370	8	40
		8			10 765	15	48			11 629	14	47			12 493	14	48
		10			13 457	23	54			14 537	22	53			15 617	22	54
	350	4	0.455	0.436	6 280	3	28	0.490	0.471	6 784	3	28	0.525	0.506	7 288	3	28
		6			9 420	8	40			10 176	8	41			10 932	7	39
		8			12 560	14	48			13 568	14	48			14 576	13	47
		10			15 700	23	54			16 960	22	54			18 220	21	54
	400	4	0.520	0.498	7 177	3	28	0.560	0.538	7 753	3	29	0.600	0.578	8 329	3	29
		6			10 765	8	41			11 629	7	40			12 493	7	40
		8			14 354	14	48			15 506	13	48			16 658	13	48
		10			17 942	22	54			19 382	21	54			20 822	21	54
	450	4	0.585	0.561	8 074	3	29	0.630	0.606	8 722	3	29	0.675	0.651	9 370	3	29
		6			12 111	7	40			13 083	7	40			14 055	7	40
		8			16 148	14	49			17 444	13	48			18 740	13	49
		10			20 185	21	54			21 805	21	54			23 425	20	54
	500	4	0.650	0.623	8 971	3	29	0.700	0.673	9 691	3	30	0.750	0.723	10 411	3	30
		6			13 457	7	40			14 537	7	41			15 617	7	41
		8			17 942	13	48			19 382	13	49			20 822	12	48
		10			22 428	21	55			24 228	20	54			26 028	19	54
	550	4	0.715	0.685	9 868	3	30	0.770	0.740	10 660	3	30	0.825	0.795	11 452	3	30
		6			14 802	7	41			15 990	7	41			17 178	6	39
		8			19 737	13	49			21 321	12	48			22 905	12	48
		10			24 671	20	54			26 651	19	54			28 631	19	54
	600	4	0.780	0.748	10 765	3	30	0.840	0.808	11 629	3	30	0.900	0.868	12 493	2	25
		6			16 148	7	41			17 444	6	39			18 740	6	40
		8			21 531	12	48			23 259	12	48			24 987	11	48
		10			26 914	20	55			29 074	19	54			31 234	18	54
	650	4	0.845	0.810	11 663	3	30	0.910	0.875	12 599	2	25	0.975	0.940	13 535	2	26
		6			17 494	6	39			18 898	6	40			20 302	6	40
		8			23 325	12	48			25 197	11	48			27 069	11	48
		10			29 156	19	54			31 496	18	54			33 836	18	54
	700	4	0.910	0.872	12 560	2	25	0.980	0.942	13 568	2	26	1.050	1.012	14 576	2	26
		6			18 840	6	40			20 352	6	40			21 864	6	40
		8			25 119	11	48			27 135	11	48			29 151	11	48
		10			31 399	18	54			33 919	17	54			36 439	17	54

3.6. technical parameters of mcr FID S/V p/P, mcr FID S/V-M p/P rectangular dampers

B – nominal width [mm]
H – nominal height [mm]

v – velocity [m/s]
Sk – duct cross-section [m²]
Se – damper active cross-section [m²]

Q – flow [m³/h]
dp – pressure drop [Pa]
L_{WA} – damper noise level [dB]

			height H [mm]														
			1300					1400					1500				
		v [m/s]	Sk [m²]	Se [m²]	Q [m³/h]	dp [Pa]	L_{WA} [dB]	Sk [m²]	Se [m²]	Q [m³/h]	dp [Pa]	L_{WA} [dB]	Sk [m²]	Se [m²]	Q [m³/h]	dp [Pa]	L_{WA} [dB]
width B [mm]	750	4	0.975	0.935	13 457	2	26	1.050	1.010	14 537	2	26	1.125	1.085	15 617	2	26
		6			20 185	6	40			21 805	6	40			23 425	6	41
		8			26 914	11	48			29 074	11	48			31 234	10	47
		10			33 642	18	54			36 342	17	54			39 042	16	53
	800	4	1.040	0.997	14 354	2	26	1.120	1.077	15 506	2	26	1.200	1.157	16 658	2	27
		6			21 531	6	40			23 259	6	41			24 987	5	39
		8			28 708	11	48			31 012	10	47			33 316	10	48
		10			35 885	17	54			38 765	16	53			41 645	16	54
	850	4	1.105	1.059	15 251	2	26	1.190	1.144	16 475	2	27	1.275	1.229	17 699	2	27
		6			22 877	6	41			24 713	5	39			26 549	5	39
		8			30 502	10	47			32 950	10	48			35 398	9	47
		10			38 128	16	53			41 188	16	54			44 248	15	53
	900	4	1.170	1.121	16 148	2	27	1.260	1.211	17 444	2	27	1.350	1.301	18 740	2	27
		6			24 222	5	38			26 166	5	39			28 110	5	39
		8			32 296	10	47			34 888	9	46			37 480	9	47
		10			40 370	16	54			43 610	15	53			46 850	14	53
	1000	4	1.300	1.246	17 942	2	27	1.400	1.346	19 382	2	27	1.500	1.446	20 822	2	28
		6			26 914	5	39			29 074	5	39			31 234	4	37
		8			35 885	9	47			38 765	9	47			41 645	8	46
		10			44 856	14	52			48 456	14	53			52 056	13	52
	1100	4	1.430	1.371	19 737	2	27										
		6			29 605	4	36										
		8			39 473	8	45										
		10			49 342	13	52										

The mcr FID S fire damper selection program is available at **www.mercor.com.pl**, in the Designer Zone.

3.7. estimated weights of mcr FID S/V p/P, mcr FID S/V-M p/P rectangular dampers [kg]

height H [mm]	width B [mm]														
	200	**250**	**300**	**400**	**500**	**600**	**700**	**800**	**900**	**1000**	**1100**	**1200**	**1300**	**1400**	**1500**
200	9.5	9.7	10	10	15	17	17.5	19	22	25	28	30	33	39	45
250	9.5	10	11	11	16	17.5	18	21	24	27	29	32	34	45	48
300	10	11	11	12	17	20	21	23	26	28	31	34	38	50	51
350	11	11	11	16	18	20.5	23	26	28	29	33	35	36	52	53
400	10	11	12	18	19	21	25	29	30	33	35	36	39	54	55
500	15	16	17	19	20	23	27	32	33	35	38	40	44	55	56
600	17	17.5	20	21	30	26	30	35	37	39	43	48	52	56	58
700	17.5	18	21	23	30	35	35	40	42	44	47	52	54	57	65
800	20	21	22	24	29	35	37	41	43	49	52	57	60	62	78
900	22	25	25	28	33	35	39	43	47	53	56	60	62	64	82
1000	23	29	28	33	36	42	43	49	53	56	59	65	67	69	98
1100	26	30	31	35	38	42	47	56	59	62	63	69	71		
1200	32	33	35	36	40	49	53	56	61	71	72	73			
1300	39	40	38	39	44	52	57	59	78	79	80				
1400	42	45	48	39	48	56	63	65	80	82					
1500	45	48	50	50	52	58	68	71	82	98					

For dampers with no actuator, subtract ~1 kg.

3.8. accessories

3.8.1. mcr KRP connection pipe

The mcr KRP connection pipes are used to connect a circular ventilation duct to a rectangular damper. The connection is a "bare end" pipe. The diameter of the connection pipe is 2 mm smaller than the diameter of the ventilation duct.

Note: due to the asymmetrical position of the fire blade in the damper casing, the connection pipes are of different lengths L, depending on the side of the damper to which they are to be mounted.

The connection pipes are supplied for both sides of the damper.

Dimensions:

BxH - damper dimensions [mm]
ØD - diameter of the connection duct [mm]
L - length [mm] calculated from the formula: H/2-50 for one connection side and H/2-150 for the other connection side

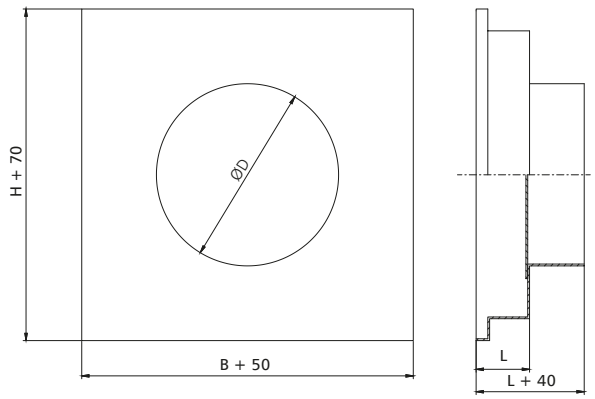

Marking:

mcr KRP / FID S / B x H / DIA / X

- material
- connection duct diameter
- damper dimensions
- type of a damper for which the connection pipe is ordered
- connection pipe

X – material

[no symbol] – galvanised steel, Zn 275 g/m^2 coating
KN – stainless steel
KK – 1.4404 acid-proof steel

3.8.2. casing module with KRW-type access

The casing modules with the KRW-type access are made of sheet metal and equipped with connection flanges. The casing features an access opening with a cover. The module enables to access the damper blade or a drive train quickly without having to dismantle the damper or the duct on which it is installed.

- KRW P module for rectangular damper

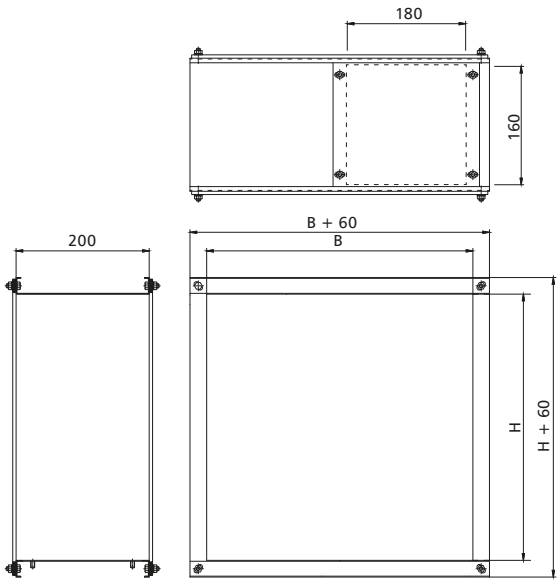

Marking:

mcr KRW P / FID S / B x H / X

- material
- damper dimensions
- type of a damper for which the module is to be ordered
- rectangular module

X – material

[no symbol] – galvanised steel, Zn 275 g/m^2 coating
KN – stainless steel
KK – 1.4404 acid-proof steel

3.9. marking

mcr FID S/V p/P B x H 1 / 2 / 3

- 3 – additional parameters
- 2 – material
- 1 – control
- B x H – width x height (nominal)
- mcr FID S/V p/P – damper type

1 – control:

– Belimo trigger control mechanism
BE24 – actuator without a return spring, U = 24 V AC/DC
BLE24 – actuator without a return spring, U = 24 V AC/DC
BE24-ST (with the BKNE230-24 option) – actuator without a return spring, U = 24 V AC/DC w/plug for the SBS control system
BLE24-ST (with the BKNE230-24 option) – actuator without a return spring, U = 24 V AC/DC w/plug for the SBS control system
BE230 – actuator without a return spring, U = 230 V AC
BLE230 – actuator without a return spring, U = 230 V AC

2 – material

[no symbol] – galvanised steel, Zn 275 g/m^2 coating
KN – stainless steel
KK – 1.4404 acid-proof steel

3 – additional parameters

Position of the control mechanism (see chapter 14.2 of this Catalogue)
[no symbol] – perpendicular to the axis of damper rotation
WOK – along the axis of damper rotation

Axis of rotation of the damper
[no symbol] – horizontal axis of rotation
PP – vertical axis of rotation
PP_D – vertical axis of rotation – mechanism at the bottom of the damper
PP_G – vertical axis of rotation – mechanism at the top of the damper

Manufacture standard (see chapter 14.2 of this Catalogue)
[no symbol] – right damper
KL – left damper
KO – inverse damper

Extended damper casing
[no symbol] – standard casing length
400 – casing with a length of 400 mm

Note: the additional parameters to be entered preceded by the "/" sign

example marking:

mcr FID S/V p/P 400 x 400 BLE24

Smoke exhaust damper for fire ventilation systems with a 24 V compact Belimo actuator with limit switches.

Chapter 13 - power supply and control (p. 203) contains:
- **technical specifications and connection diagrams for the trigger control mechanisms supporting the damper.**

Chapter 14 - additional information (p. 210) contains:
- **location of trigger control mechanisms in relation to the damper - production standards,**
- **table for quick selection of dampers, depending on fire separation and its thickness,**
- **installation distances: damper-ceiling, damper-wall, damper-damper.**

mcr FID PRO

low-resistance circular single-blade cut-off fire dampers for comfort ventilation systems

PRODUCT CONFIGURATOR AND CAD MODELS/BIM AT WWW.MERCOR.COM.PL IN THE DESIGNER'S ZONE

BIM CAD

2434-CPR-0009

ATEST HIGIENICZNY

CTO S.A.

- EIS60, EIS120, EIS180
- Certificate of constancy of performance 2434-CPR-0009.
- Dampers certified for compliance with EN 15650.
- Dampers qualified under EN 13501-3 and tested under EN 1366-2.
- Cut-off dampers with the fire resistance independent of airflow direction and installation side.
- Lower acoustic noise and hydraulic resistance in the system with reduced partition thickness.

4.1. application

The mcr FID PRO low-resistance cut-off dampers are designed for use in residential ventilation systems, where those systems pass through vertical and horizontal construction partitions. They are installed e.g. in systems with increased acoustic requirements.

During a fire, they preserve the fire resistance of the construction partition where ventilation and air conditioning ducts are routed through. Furthermore, they prevent the spreading of fire, smoke and burning fumes to the remaining part of the building which is not on fire. During normal system operation, the damper blade is open. In case of fire, the damper blade closes.

The dampers cannot be operated in systems exposed to dust, except for when they are included in a special, individually developed programme of service and technical inspections.

In the version designed for explosion hazard zones (EX version), the dampers can operate in gas explosion hazard zone 1 inside and outside ventilation ducts, and dust explosion hazard zone 21 outside these ducts. The dampers have been certified in compliance with the ATEX directive 94/9/EC and meet the requirements of group II category 2G and -/2D:

II 2G Ex h IIC T6 Gb

II -/2D Ex h IIIC T72° -/Db

Ambient temperature: Ta: -20°... +50°

4.2. design

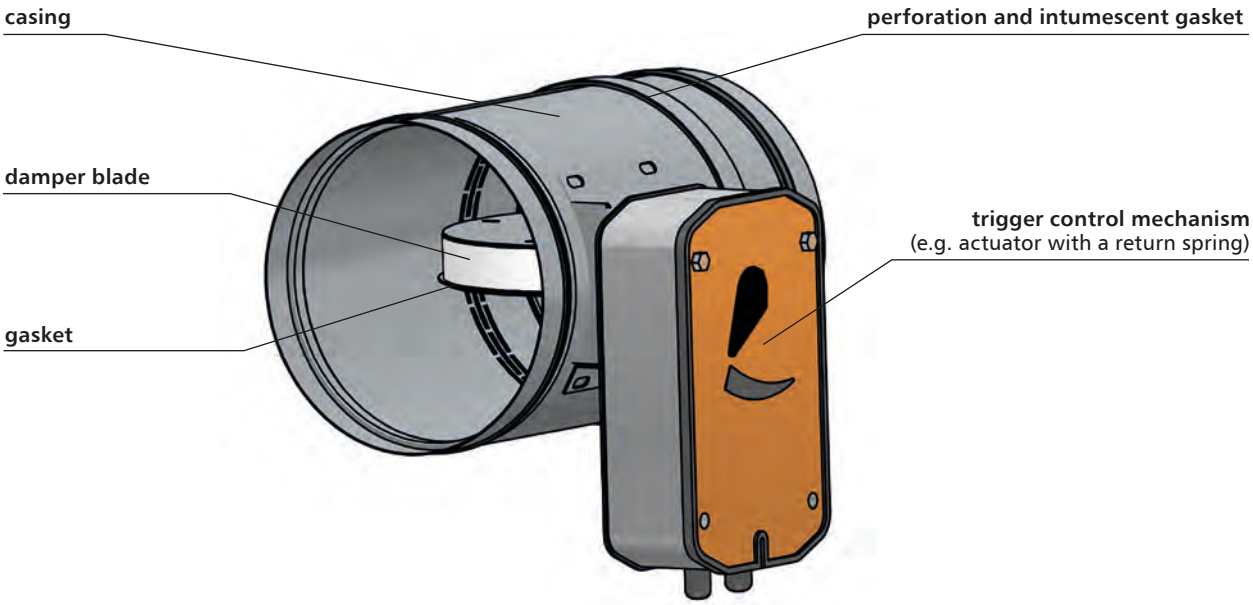

The mcr FID PRO cut-off fire dampers consist of a casing with a circular cross section, a moving damper blade and a trigger control mechanism, which is activated remotely or automatically when the thermal or thermoelectric trigger is tripped. Standard damper casing is made of galvanised steel sheet. For chemically aggressive environments, special manufacture casing is used, in which steel elements are made of 1.4404 acid-proof steel sheet, while other elements are impregnated.

In the middle part, in which the damper blade is placed, the casing is perforated, with the perforation width depending on the blade diameter and thickness. On the damper circumference, around the closed damper blade, there is an intumescent gasket. The insulation blade is made of a 20 mm thick fire-proof panel for dampers with diameters from 100 mm to 200 mm, or a 40 mm thick fire-proof panel for dampers with diameters from 201 to 315 mm, and EIS120 damper fire rating. For the EIS60 damper fire rating, the blade thickness is 15 mm.

The blade is covered on both sides with steel sheet for mechanical reinforcement and reduction of friction resistance. A ventilation gasket is mounted on the perimeter of the blade, ensuring tightness of the dampers at ambient temperature. Both ends of the casing are finished nipple (standard) or muff connection. The nipple (male connection) dampers are made without external rubber perimeter gaskets, as standard. The dampers will be supplied with the perimeter lip seal, if required by a customer.

4.3. versions

4.3.1. mcr FID PRO – the cut-off fire damper for ventilation ducts with an actuator with a return spring – damper closing and opening with an actuator

During normal operation, the damper blade of the fire damper remains open. In case of fire, the blade closes automatically or remotely when the power supply is cut off.

The mcr FID PRO dampers are equipped with a Belimo trigger control mechanisms **BFL**, **EXBF** or **BF-TL** axial actuator with a return spring, powered with 24 V AC/DC or 230 V AC, with thermoelectric trigger 72°C (optionally it is possible to use triggers with the nominal tripping temperature of 95°C). The actuators are equipped with limit switches used to monitor the blade position. Furthermore, the mechanical position indicator is placed on the actuator.

The thermoelectric trigger is equipped with a test switch and a power supply indicator (LED).

Dampers with Belimo actuators: analogue BFL, digital BF-TL, EXBF explosion proof actuators close as a result of thermoelectric trigger tripping or power supply cut-off as a result of the actuator return spring action. The dampers open when the power supply voltage is applied to the actuator terminals. Furthermore, dampers with those actuators may be opened manually using a key.

female connection type (muff)

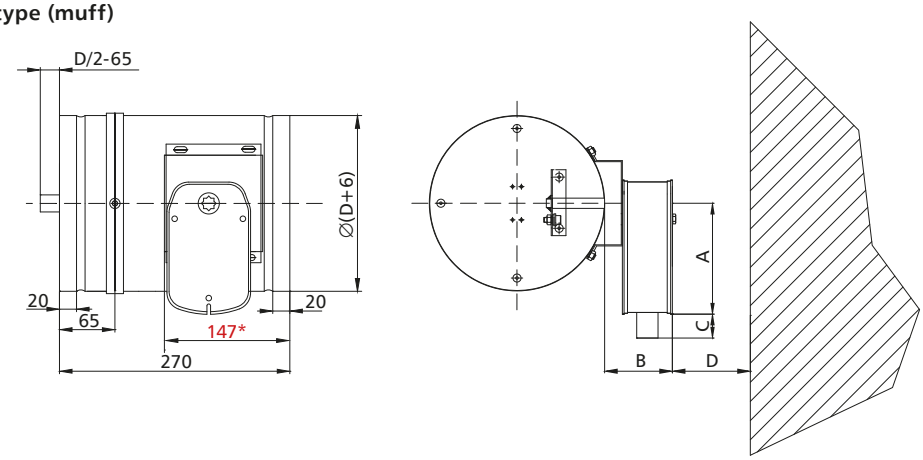

*embedding border

male connection type (nipple)

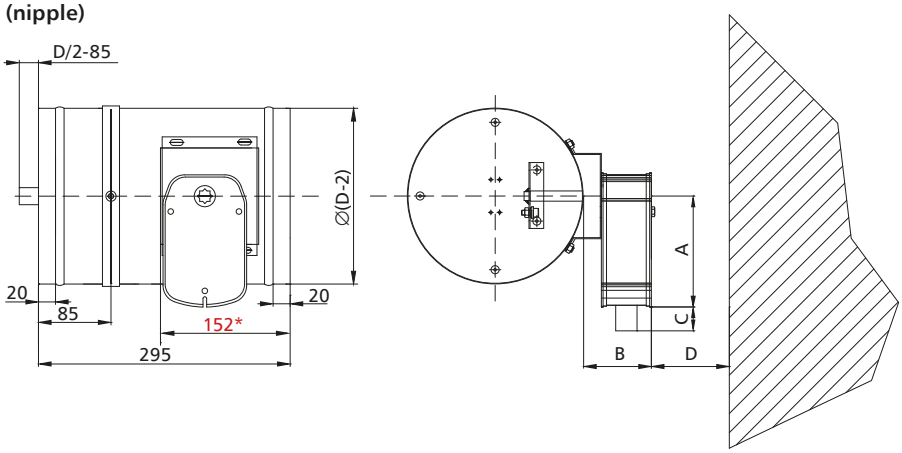

*embedding border

version with circumferential seal type F

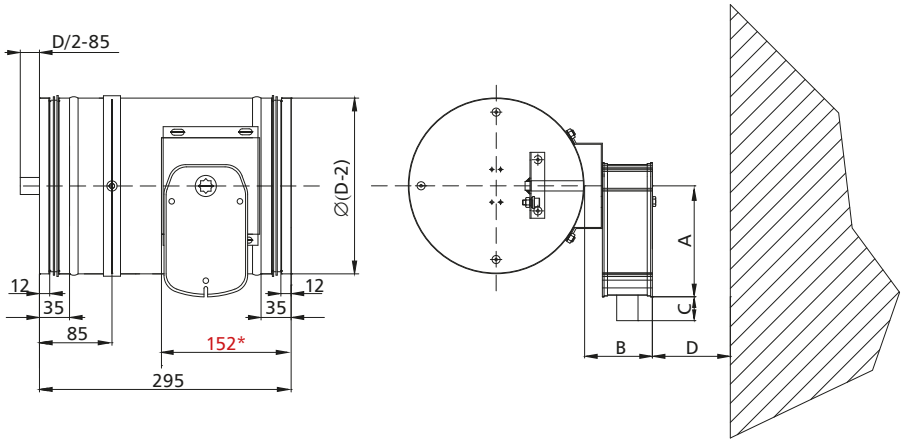

mechanism	A	B	C	D
BFL	138	74	30	75
BF24TL-ST	198	85	10	75
EXBF	225	190	55	100
*embedding border				

mounting flange

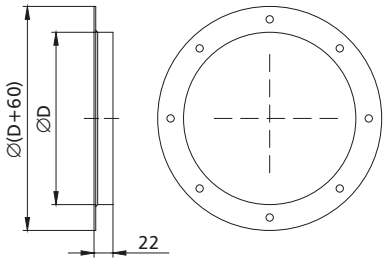

Spacing and quantities of openings according to EN 12220 (dimensions of flanges with circular intersection for comfort ventilation purposes).

4.3.2. **mcr FID PRO** – the cut-off fire damper for ventilation ducts with a spring drive and thermal trigger

During normal operation, the damper blade of the fire damper remains open. In case of fire, the blade closes automatically.

The mcr FID PRO dampers are equipped with a **RST** trigger control mechanism with a drive spring (without an integrated thermal trigger). In this case, a thermal trigger 74°C (optionally 95°C) is installed outside the damper mechanism, on the damper blade itself. After the nominal temperature is exceeded, the thermal trigger is tripped and the louvers close. It is possible to equip the damper with a WK1 or WK2 limit switch used to signal the blade position state.

female connection type (muff)

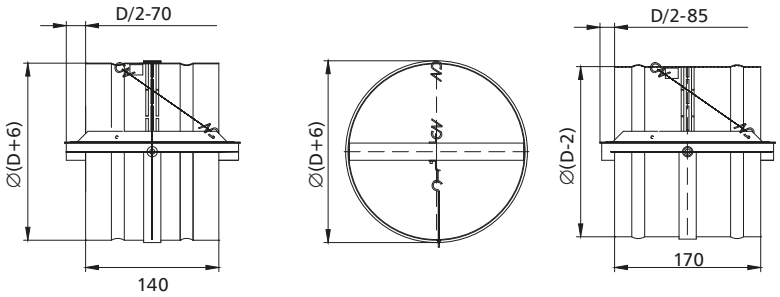

insert symmetrically in relation to the axis of the wall

male connection type (nipple)

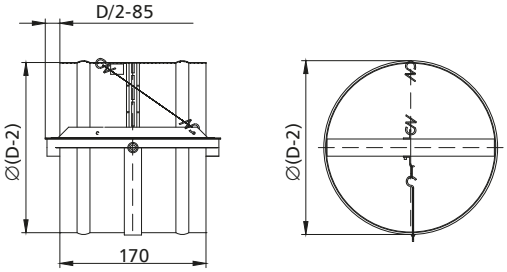

insert symmetrically in relation to the axis of the wall

mounting flange

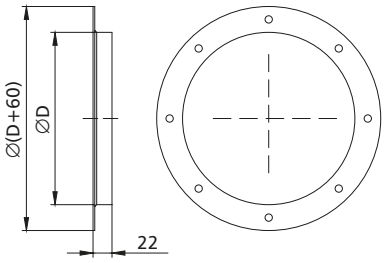

Spacing and quantities of openings according to EN 12220 (dimensions of flanges with circular intersection for comfort ventilation purposes).

4.3.3. mcr FID PRO – the cut-off fire damper for ventilation ducts with a spring drive and an integrated thermal trigger, optionally equipped with an electromagnetic trigger and limit switches

During normal operation, the damper blade of the fire damper remains open. In case of fire, the blade closes automatically or, in case of a damper with an electromagnetic trigger, additionally using the fire automation.

The mcr FID PRO dampers are equipped with a **RST-KW1** trigger control mechanism with a drive spring and a cam-lever system. A thermal trigger 74°C (optionally at 95°C) is integrated into the damper mechanism. After the nominal temperature is exceeded, the thermal trigger is tripped and the louvers close. On the RST-KW1 mechanism, there is a mechanical indicator of blades position. It is possible to equip a trigger control mechanism with an electromagnetic trigger activated by the application („pulse") or removal („break") of the power supply voltage and with limit switches used to signal the blades position state. The mechanism features test and blades button-release functions. Blade re-opening is activated manually using a key. It is not required to dismantle the system to replace the thermal trigger. The RST-KW1 mechanism may be replaced with an electric actuator.

female connection type (muff)

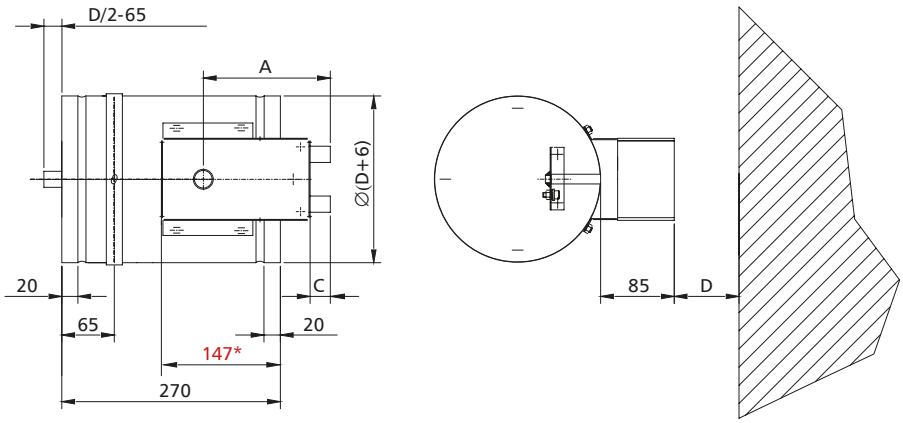

*embedding border

male connection type (nipple)

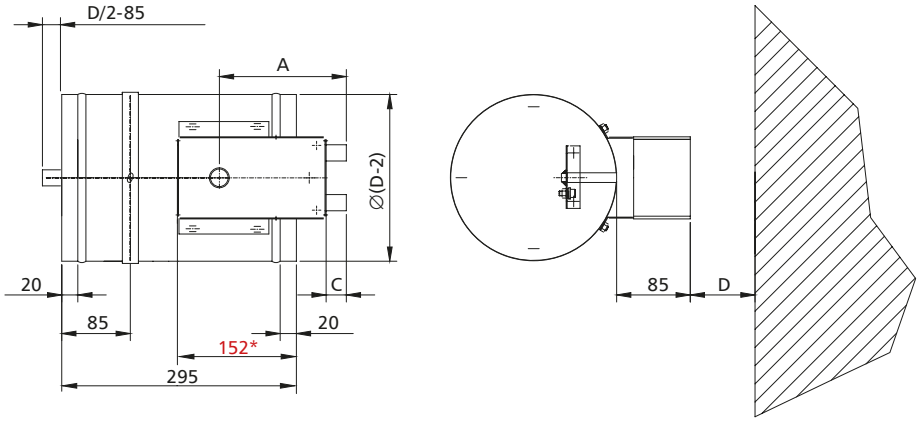

*embedding border

version with circumferential seal type F

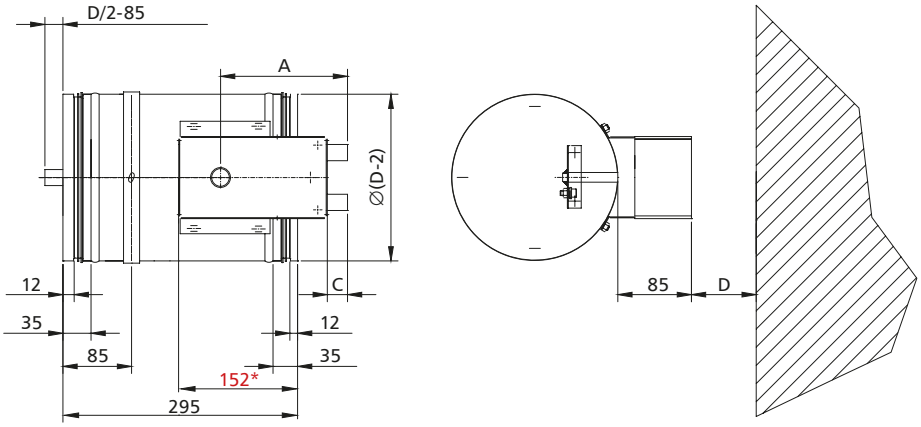

mechanism	A	C	D
RST-KW1	130	30	75
*embedding border			

mounting flange

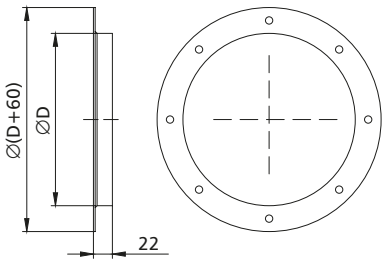

Spacing and quantities of openings according to EN 12220 (dimensions of flanges with circular intersection for comfort ventilation purposes).

4.4. dimensions

Circular dampers:

- nominal diameter D from 100 mm to 315 mm

Apart from the standard dimensions, fire dampers may be manufactored with intermediate dimensions (in 1 mm increments, in the given range).

4.5. installation

The mcr FID PRO round dampers are EI120(ve ho i↔o)S and EI60(ve ho i↔o)S-rated if installed in concrete partitions, partitions made of full bricks or cellular blocks with a thickness of at least 125 mm, lightweight walls made of gypsum board panels on a steel framework with a thickness of min. 125 mm and a fire rating corresponding with the rating of the damper, and concrete floors with a thickness of min. 150 mm. Additionally dampers mcr FID PRO with diameter 201-315 mm installed in concrete ceilings are E180(ho i↔o)S-rated.

The dampers can also be installed away from lightweight walls made of gypsum board panels, provided that the section of a ventilation duct between the damper and the wall meets the criteria of EIS120 fire rating.

4.5.1. preparation of installation openings

in lightweight gypsum board walls

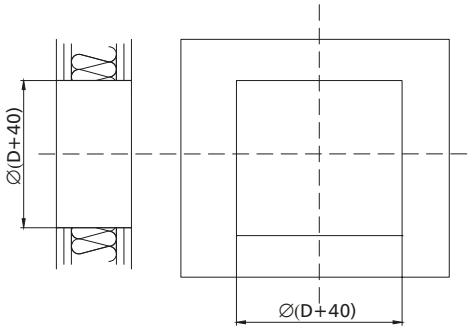

in rigid walls and ceilings

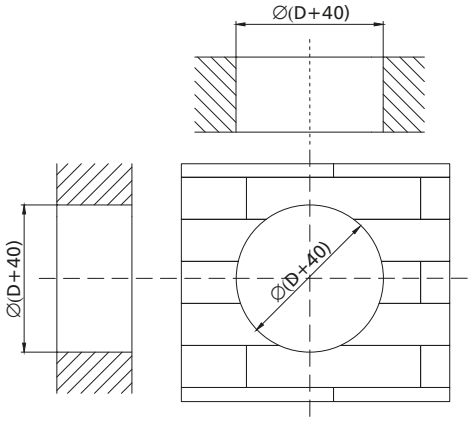

4.5.2. sample installation in lightweight walls of plaster-cardboard panels

mcr FID PRO damper with a RST mechanism

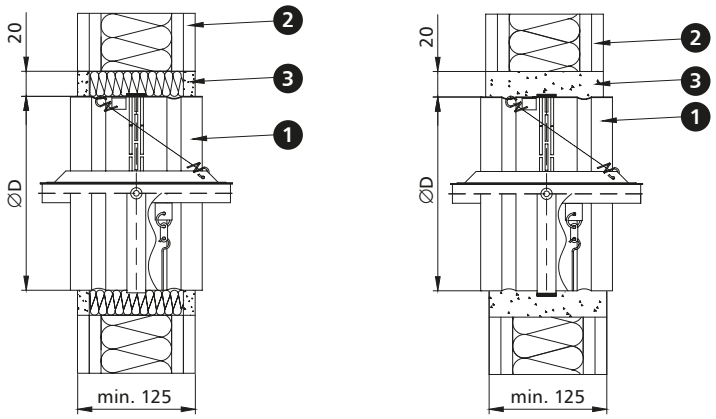

mcr FID PRO damper with a BFL or RST-KW1 mechanism

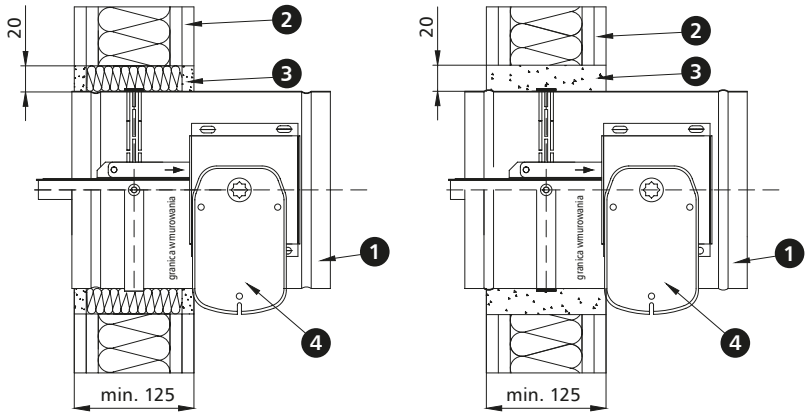

1. mcr FID PRO fire damper
2. lightweight wall
3. sealing - mineral wool with a min. density of 80 kg/m^3, class A1, and/or gypsum mortar*
4. trigger control mechanism

*it is possible to use a different sealing which ensures the required fire resistance

4.5.3. sample installation in concrete and masonry walls

mcr FID PRO damper with RST mechanism

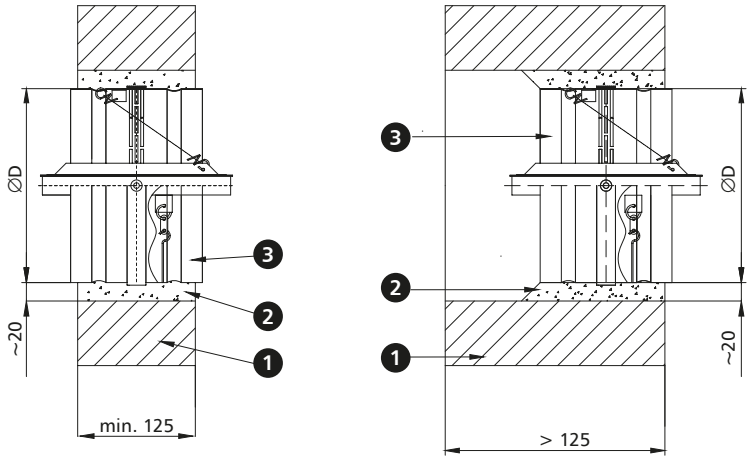

mcr FID PRO damper with BFL, RST-KW1 mechanism

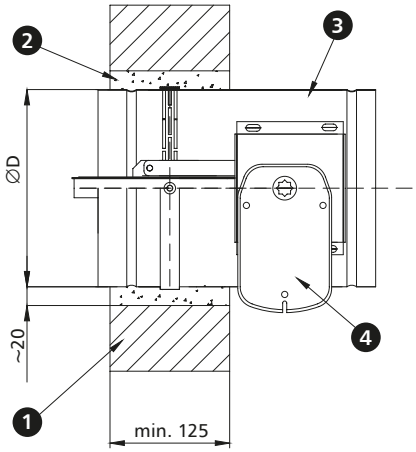

1. rigid wall - concrete, cellular concrete or bricks
2. sealing - concrete, cement or cement-lime masonry mortar*
3. mcr FID PRO fire damper
4. trigger control mechanism

*it is possible to use a different sealing which ensures the required fire resistance

4.5.4. sample installation in ceilings

mcr FID PRO damper with BFL, RST-KW1 mechanism

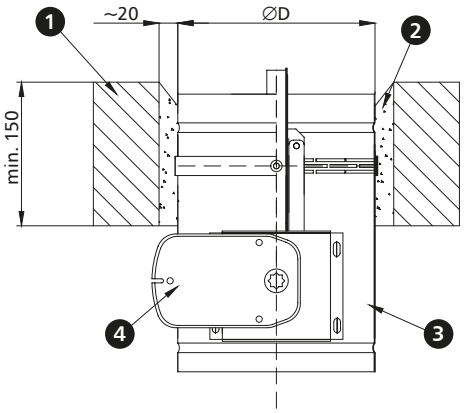

mcr FID PRO damper with BFL, RST-KW1 mechanism

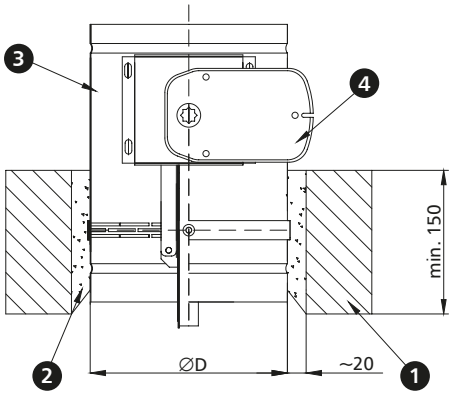

mcr FID PRO damper with a RST mechanism

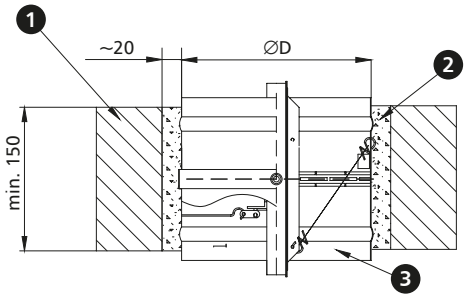

1. ceiling
2. sealing - concrete, cement or cement-lime masonry mortar*
3. mcr FID PRO fire damper
4. trigger control mechanism

*it is possible to use a different sealing which ensures the required fire resistance

4.5.5. sample installation outside the fire partition

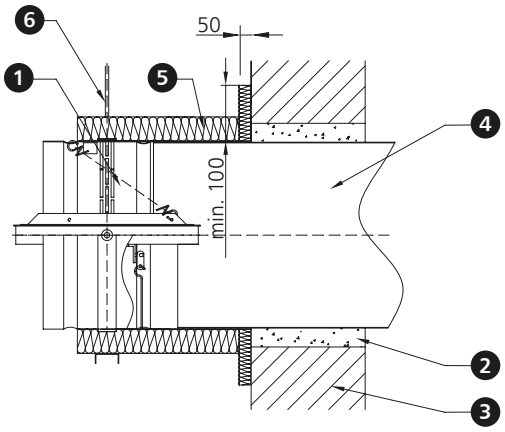

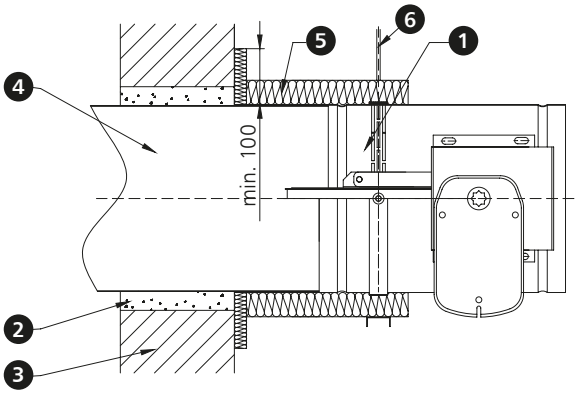

1. mcr FID PRO fire damper
2. e.g. cement mortar*
3. wall
4. ventilation duct
5. fire protection material ensuring EI120S fire rating or higher
6. duct suspension

*it is possible to use a different sealing which ensures the required fire resistance

Distance between systems and partitions

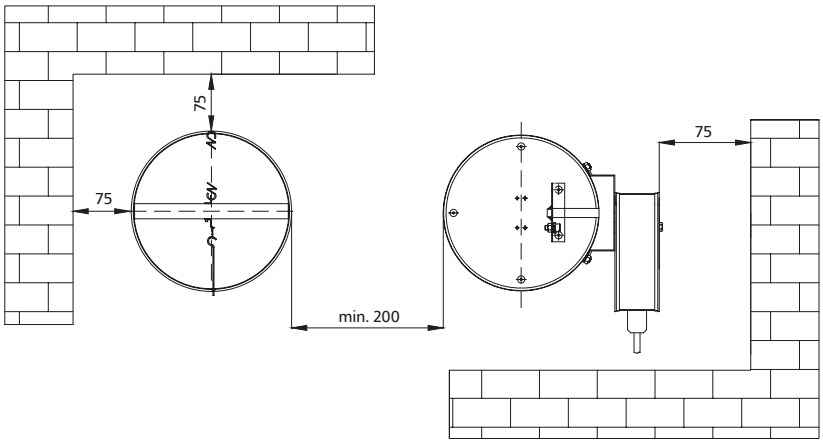

4.6. technical parameters of mcr FID PRO round dampers

D – nominal diameter [mm]
v – velocity [m/s]

Sk – duct cross-section [m²]
Se – damper active cross-section [m²]

Q – flow [m³/h]
dp –pressure drop [Pa]
L_{WA} – damper noise level [dB]

mcr FID PRO EIS 60

mcr FID PRO 100

D [mm]	Sk [m²]	Se [m²]	v [m/s]	Q [m³/h]	dp [Pa]	L_{WA} [dB]
100	0.0079	0.0064	2	46	3	16
			4	91	11	25
			6	137	20	33
			8	183	32	40

mcr FID PRO 125

D [mm]	Sk [m²]	Se [m²]	v [m/s]	Q [m³/h]	dp [Pa]	L_{WA} [dB]
125	0.0123	0.0104	2	75	2	14
			4	150	8	23
			6	224	15	32
			8	299	25	39

mcr FID PRO 160

D [mm]	Sk [m²]	Se [m²]	v [m/s]	Q [m³/h]	dp [Pa]	L_{WA} [dB]
160	0.0201	0.0177	2	127	1	11
			4	255	3	14
			6	382	7	24
			8	510	12	32

mcr FID PRO 200

D [mm]	Sk [m²]	Se [m²]	v [m/s]	Q [m³/h]	dp [Pa]	L_{WA} [dB]
200	0.0314	0.0284	2	204	1	12
			4	409	3	17
			6	613	8	29
			8	818	15	37

mcr FID PRO 250

D [mm]	Sk [m²]	Se [m²]	v [m/s]	Q [m³/h]	dp [Pa]	L_{WA} [dB]
250	0.0491	0.0453	2	326	1	3
			4	653	2	8
			6	979	2	15
			8	1305	4	20

mcr FID PRO 315

D [mm]	Sk [m²]	Se [m²]	v [m/s]	Q [m³/h]	dp [Pa]	L_{WA} [dB]
315	0.0779	0.0732	2	527	1	4
			4	1054	2	10
			6	1580	3	18
			8	2107	5	26

4.6. technical parameters of mcr FID PRO round dampers

D – nominal diameter [mm]
v – velocity [m/s]
Sk – duct cross-section [m²]
Se – damper active cross-section [m²]
Q – flow [m³/h]
dp –pressure drop [Pa]
L_{WA} – damper noise level [dB]

mcr FID PRO EIS 120

mcr FID PRO 100

D [mm]	Sk [m²]	Se [m²]	v [m/s]	Q [m³/h]	dp [Pa]	L_{WA} [dB]
100	0.0079	0.0059	2	42	4.5	21
			4	84	14	29
			6	126	26	37
			8	168	42	43

mcr FID PRO 125

D [mm]	Sk [m²]	Se [m²]	v [m/s]	Q [m³/h]	dp [Pa]	L_{WA} [dB]
125	0.0123	0.0098	2	70	3	19
			4	141	10	27
			6	211	20	36
			8	281	33	42

mcr FID PRO 160

D [mm]	Sk [m²]	Se [m²]	v [m/s]	Q [m³/h]	dp [Pa]	L_{WA} [dB]
160	0.0201	0.0169	2	122	1	16
			4	243	4	17
			6	365	9	28
			8	487	16	35

mcr FID PRO 200

D [mm]	Sk [m²]	Se [m²]	v [m/s]	Q [m³/h]	dp [Pa]	L_{WA} [dB]
200	0.0314	0.0274	2	197	1	16
			4	395	5	21
			6	592	11	33
			8	789	20	40

mcr FID PRO 250

D [mm]	Sk [m²]	Se [m²]	v [m/s]	Q [m³/h]	dp [Pa]	L_{WA} [dB]
250	0.0491	0.0391	2	281	2	17
			4	563	4	21
			6	844	7	27
			8	1125	10	33

mcr FID PRO 315

D [mm]	Sk [m²]	Se [m²]	v [m/s]	Q [m³/h]	dp [Pa]	L_{WA} [dB]
315	0.0779	0.0653	2	470	2	18
			4	940	4	23
			6	1410	7	31
			8	1880	13	39

The mcr FID PRO fire damper selection program is available at **www.mercor.com.pl**, in the Designer Zone.

4.6.1. flow characteristics in circular mcr FID PRO dampers

EIS120 — damper noise level
EIS120 — pressure drop on a damper
EIS60 — pressure drop on a damper
EIS60 — damper noise level

mcr FID PRO 100

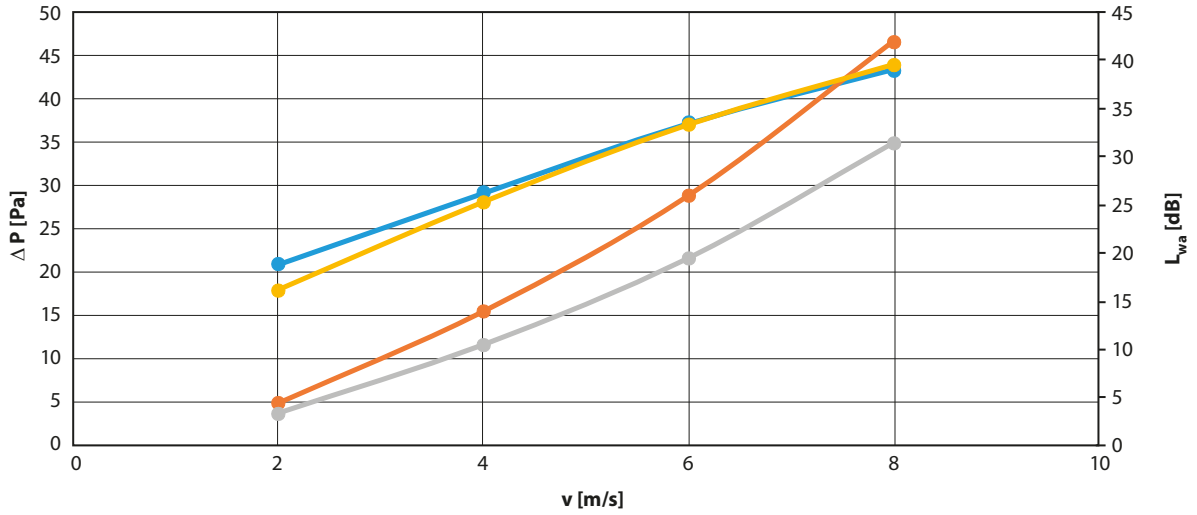

mcr FID PRO 125

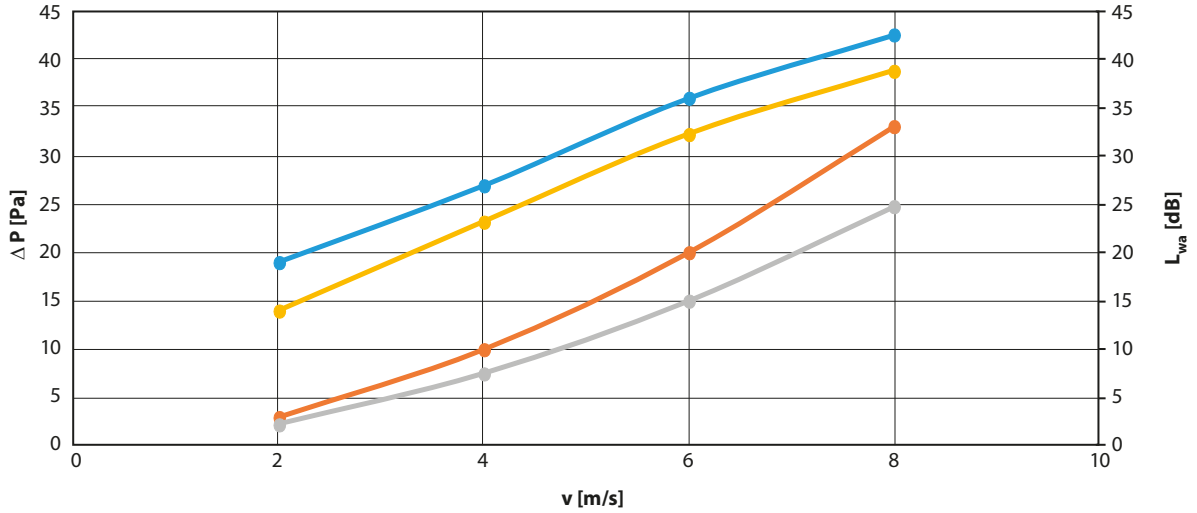

mcr FID PRO 160

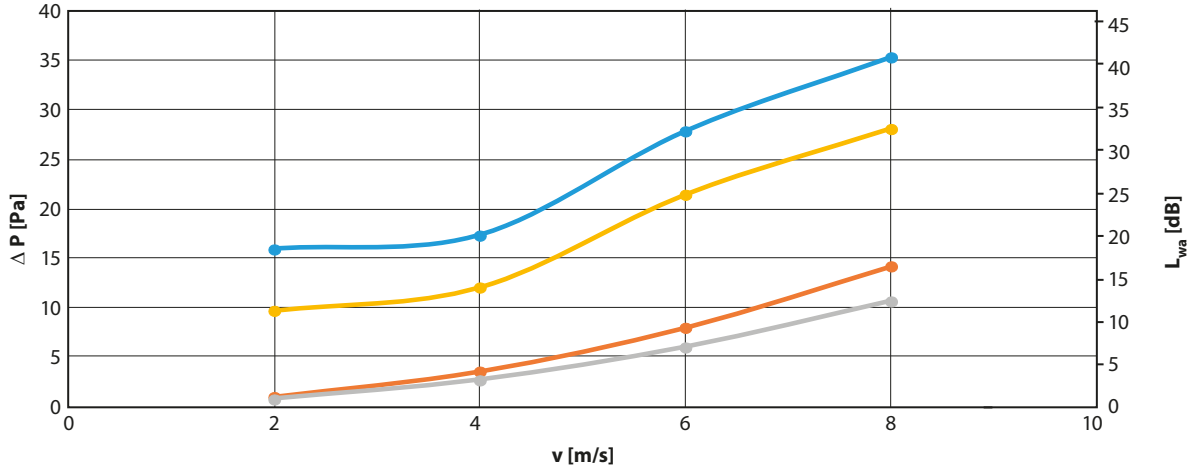

4.6.1. flow characteristics in circular mcr FID PRO dampers

EIS120 — damper noise level
EIS120 — pressure drop on a damper
EIS60 — pressure drop on a damper
EIS60 — damper noise level

mcr FID PRO 200

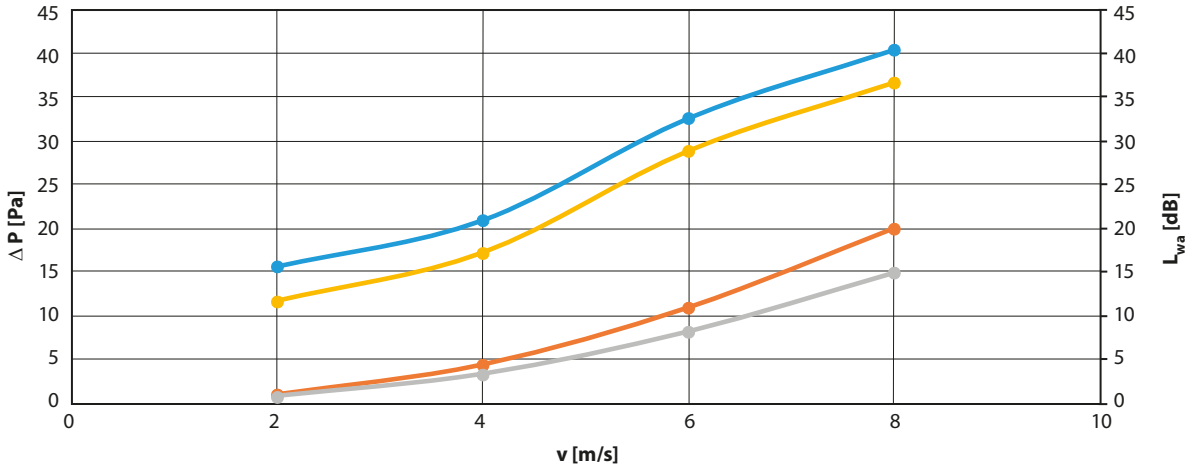

mcr FID PRO 250

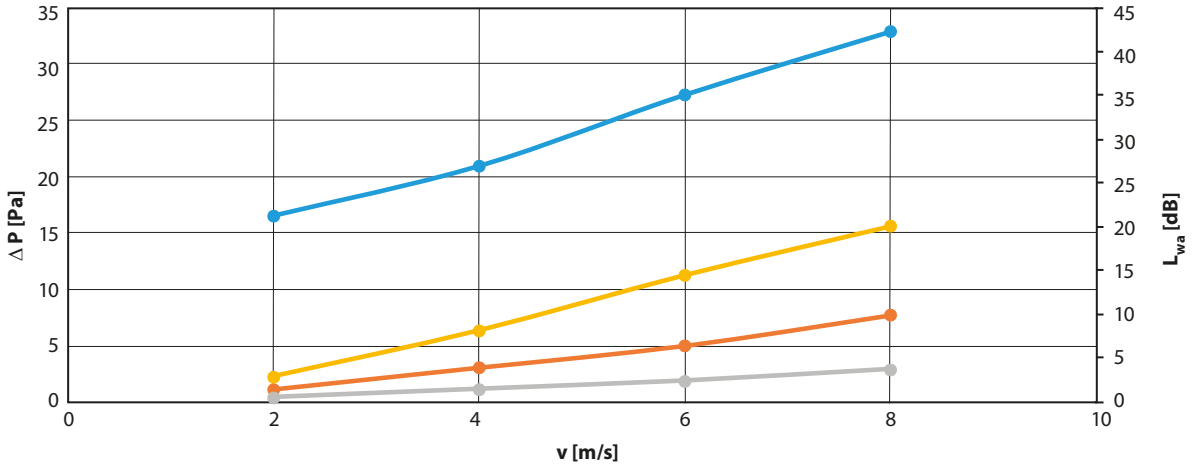

mcr FID PRO 315

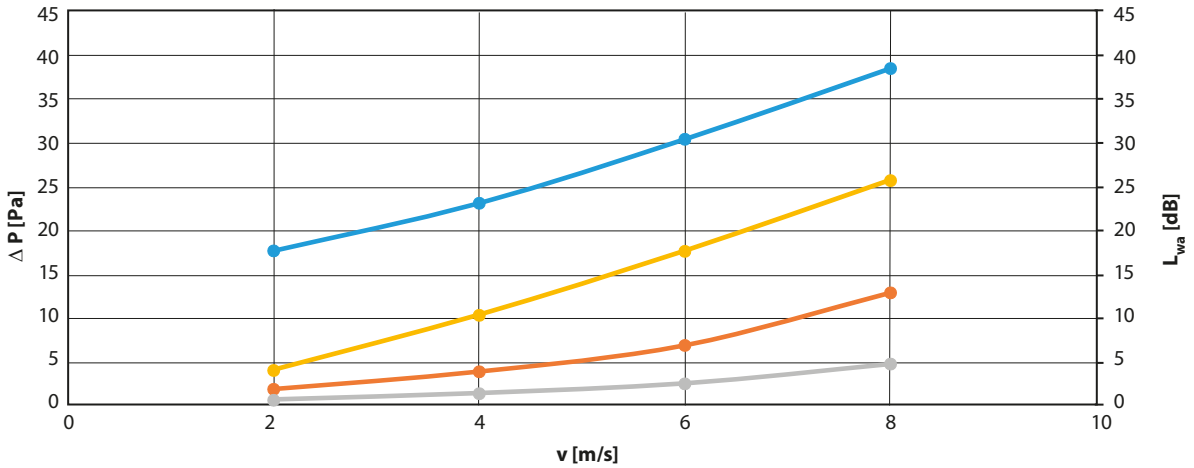

4.7. estimated weights of mcr FID PRO dampers for circular ventilation ducts [kg]

diameter D [mm]	RST	actuator/RST-KW1
100	0.7	3
125	0.9	3.2
160	1.2	3.6
200	1.7	4.2
250	2.1	4.6
315	2.6	5.1

4.8. accessories

4.8.1. casing module with KRW-type access

The casing modules with the KRW-type access are made of steel sheet and equipped with connection flanges. The casing features an access opening with a cover. The module enables to access the damper blade or a power transmission system quickly without neede to dismantle the damper or the duct on which it is installed.

Versions:

- KRW O/M module
round muff module for nipple damper

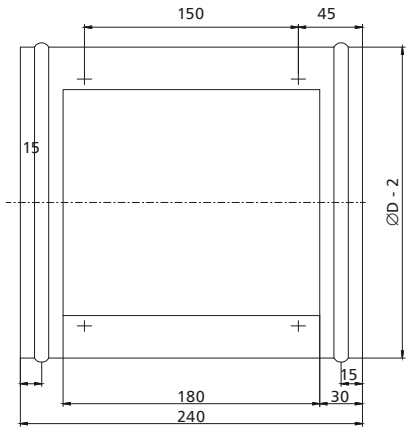

- KRW O/N module
round nipple module for muff damper

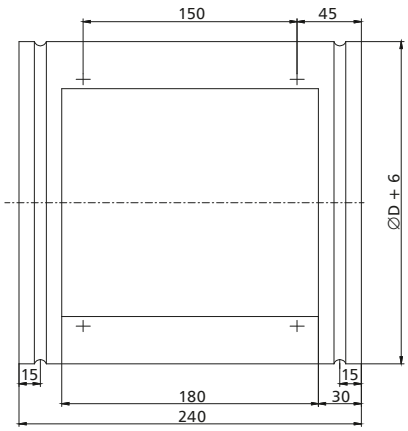

Marking:

mcr KRW ON / FID S / B x H / X

- material
- damper dimensions
- type of a damper for which the module is to be ordered
- round nipple module - mcr KRW ON
  round muff module - mcr KRW OM

X – material

[no symbol] – galvanised steel, Zn 275 g/m^2 coating
KN – stainless steel
KK – 1.4404 acid-proof steel

4.8.2. mounting flange

The connection flange is used to connect a round fire damper to a duct with a connection made in accordance with EN 12220.

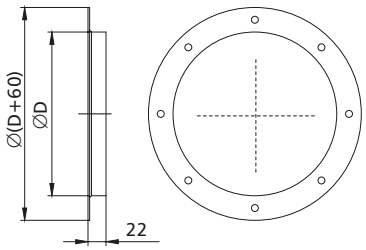

4.9. marking

mcr FID PRO S/1 / Ø / 2 / 3 / 4 / 5

- 5 – fire resistance
- 4 – additional parameters
- 3 – material
- 2 – control
- Ø – nominal diameter
- S/1 – connection method
- mcr FID PRO – damper type

1 – connection method:

N or **[no symbol]** – male connection (nipple)
M – female connection (muff)
K – flange

2 – control:

– RST trigger control mechanism
RST – thermal trigger
RST/WK1 – thermal trigger + limit switch (closed blade signal)
RST/WK2 – thermal trigger + limit switch (open/closed blade signal)

– RST-KW1 trigger control mechanism
RST-KW1/S – thermal trigger
RST-KW1/S/WK2 – thermal trigger + limit switch (open/closed blade signal)
RST-KW1/24I – thermal trigger + "pulse" electromagnetic trigger, U = 24 V DC and a limit switch (closed/open partition signalling)
RST-KW1/24P – thermal trigger + "break" electromagnetic trigger, U = 24 V DC and a limit switch (closed/open partition signalling)
RST-KW1/230I – thermal trigger + "pulse" electromagnetic trigger, U = 230 V AC and a limit switch (closed/open partition signalling)
RST-KW1/230P – thermal trigger + "break" electromagnetic trigger, U = 230 V AC and a limit switch (closed/open partition signalling)

– Belimo trigger control mechanism
BF24TL-T-ST (with the BKN230-24MP option) – actuator with a return spring, U = 24 V, MP Bus digital control
EXBF24-T – explosion proof actuator with a return spring in the Ex version, U = 24 V AC/DC
EXBF230-T – explosion proof actuator with a return spring in the Ex version, U = 230 V AC
BFL24-T – actuator with a return spring, U = 24 V AC/DC
BFL230-T – actuator with a return spring, U = 230 V AC
BFL24-T-ST (with the BKN230-24 option) – actuator with a return spring, for the SBS Control system

3 – material

[no symbol] – galvanised steel, Zn 275 g/m^2 coating
KN – stainless steel
KK – 1.4404 acid-proof steel

4 – additional parameters

Thermoelectric and thermal triggers
[no symbol] – trigger for 72°C
ZBAE95 – thermoelectric trigger 95°C
ZBAT95 – thermoelectric trigger at 95°C
T93-95 – thermal trigger for 95°C

Position of the control mechanism (see chapter 14.2 of this Catalogue)
[no symbol] – perpendicular to the axis of damper rotation
WOK – along the axis of damper rotation

Axis of rotation of the damper
[no symbol] - horizontal axis of rotation
PP – vertical axis of rotation
PP_D – vertical axis of rotation - mechanism at the bottom of the damper
PP_G – vertical axis of rotation - mechanism at the top of the damper

Extended damper casing
[no symbol] – standard casing length
400 – casing with a length of 400 mm

External perimeter seals
[no symbol] – version without seals
UKW – version with external seals

5 – fire resistance

[no symbol] – EI120 fire resistance
EI60 – EI60 fire resistance

* – for damper with RST-KW1 mechanism, a trigger control mechanism is mounted as standard along the axis of rotation - exception

Note: the additional parameters to be entered preceded by the "/" sign

example marking:

mcr FID PRO ∅125 BFL24-T

EIS120 low-resistance cut-off damper with a 24 V compact Belimo actuator with a thermoelectric trigger and limit switches.

mcr FID PRO ∅125 RST/WK1

EIS120 low-resistance cut-off damper with a trigger rated at 74°C and a partition closing limit switch.

Chapter 13 - power supply and control (p. 203) contains:
- **technical specifications and connection diagrams for the trigger control mechanisms supporting the damper.**

Chapter 14 - additional information (p. 210) contains:
- **location of trigger control mechanisms in relation to the damper - production standards,**
- **table for quick selection of dampers, depending on fire separation and its thickness,**
- **installation distances: damper-ceiling, damper-wall, damper-damper.**

PRODUCT CONFIGURATOR AND CAD MODELS/BIM AT WWW.MERCOR.COM.PL IN THE DESIGNER'S ZONE

BIM CAD

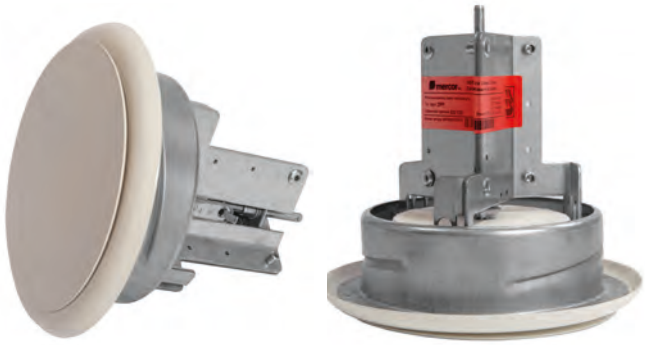

1396-CPR-0092

ATEST HIGIENICZNY

- EIS120
- **Certificate of constancy of performance 1396-CPR-0092.**
- **Valves certified for compliance with EN 15650.**
- **Valves qualified under EN 13501-3 and tested under EN 1366-2.**

5.1. application

The mcr ZIPP cut-off fire valves are designed for installation at the ends of the general ventilation system, where those systems pass through construction partitions. They are used to separate the fire hazard zone from other parts of the building and to transfer air through construction partitions. During normal system operation, the valves are open. In case of fire, the valves close.

Furthermore, the mcr ZIPP cut-off fire valves may be used to close transfer openings, in which case they are installed without connection ducts.

Valves may also be used in the systems which are protecting escape routes from smoke, in which case they remain open during the fire and ensure the supply of fresh air to escape routes. As the fire develops further, the valves are automatically closed as a result of thermal trigger tripping, which prevents the spreading of fire and smoke to other rooms.

5.2. design

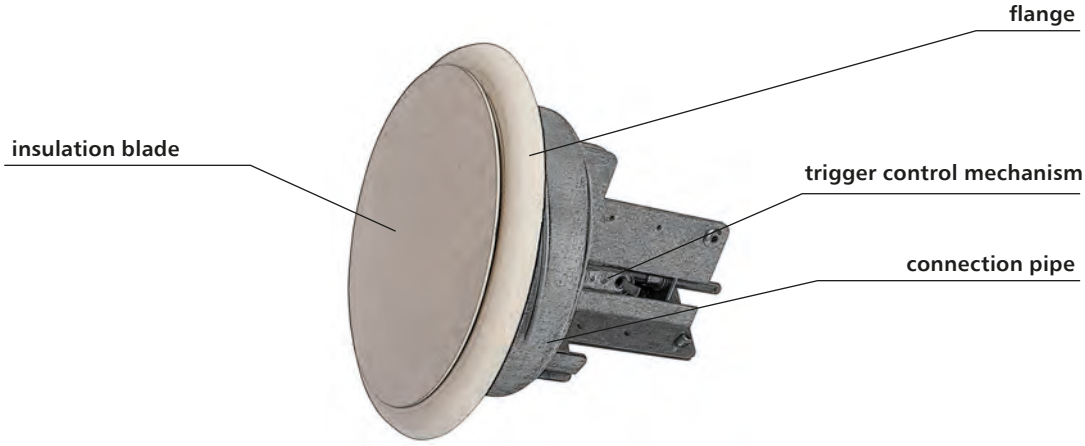

The mcr ZIPP cut-off valves consist of a casing with a circular cross-section, a moving cut-off partition (cover), a connection stub pipe and a trigger control mechanism activated when the thermal or electromagnetic trigger trips, with the automatic trip of the thermal trigger overrides the remote power supply application or disconnection.

The connection stub pipe is made of galvanised steel sheet. The valve flange is made of powder-painted steel sheet. The insulation blade of the valve is made of fire protection material, coated on the outside with powder-painted steel sheet. The blade is placed on a treaded, moving guiding pin, which enables the adjustment of performance (active surface) of the valve by tightening the cover.

During normal operation, cut-off valves remain open. The valve switches to safe mode (closes):

- automatically, by the thermal trigger tripping (RST trigger control mechanism),
- remotely, by the electromagnetic and thermal trigger tripping (RST+EK trigger control mechanism).

As a standard the valves are painted in RAL 9010.

5.3. versions

5.3.1. mcr ZIPP RST – the cut-off fire valve for ventilation ducts with a thermal trigger

During normal operation, the insulation blade of the fire valve remains open. In case of fire, the blade closes automatically.

The mcr ZIPP RST valves are equipped with a RST trigger control mechanism with a thermal trigger 74°C (optionally, it is possible to use triggers with the nominal tripping temperature of 95°C) and a spring drive. After the nominal temperature is exceeded, the thermal trigger is tripped and the louvers close. It is possible to equip the valves with a WK1 limit switch used to signal the blade position state.

closed valve blade

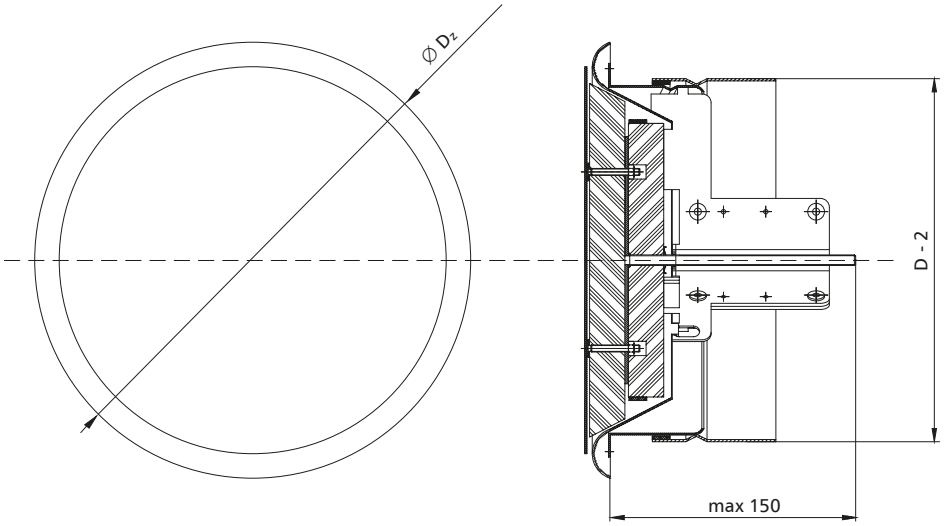

5.3.2. mcr ZIPP RST+EK – the cut-off fire valve for ventilation ducts with an electromagnetic and thermal trigger

During normal operation, the insulation blade of the fire valve remains open. In case of fire, the blade closes automatically or remotely by applying or cutting off the power supply.

The mcr ZIPP RST+EK valves are equipped with a trigger control mechanism with a thermal trigger 74°C (optionally 95°C), a spring drive and an electromagnetic trigger tripped by the power supply application ("pulse") or removal ("break"). The use of a MP230/24 conversion element enables tripping the blade with 230 V AC voltage. The valve is equipped with a WK1 limit switch used to signal the blade position state.

open valve blade

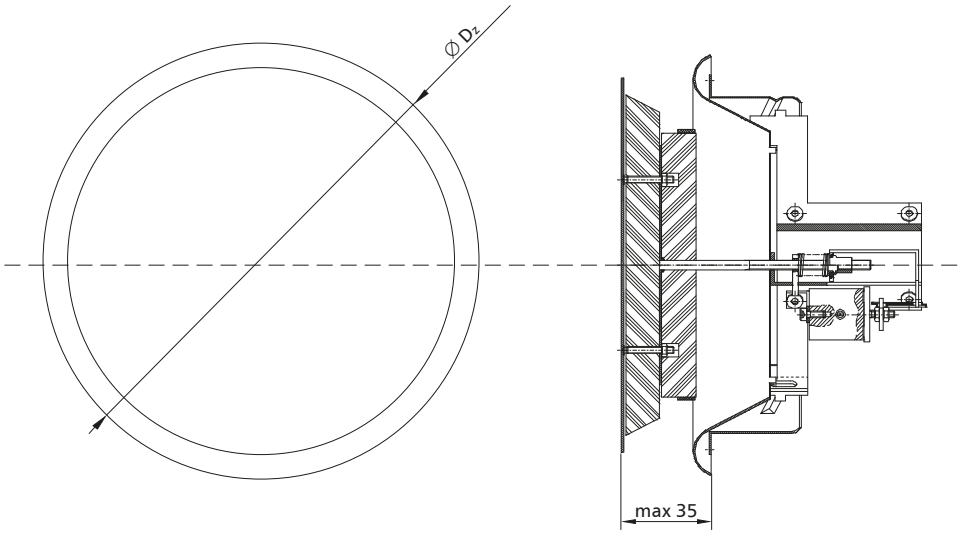

5.4. dimensions

Circular valves:

- nominal diameter D: 100 mm, 125 mm, 160 mm, 200 mm.

5.5. installation

The mcr ZIPP valves are EI120(ve ho o→i)S-rated if installed in concrete partitions, partitions made of full bricks or cellular blocks with a thickness of at least 110 mm, lightweight walls made of gypsum board panels on a steel framework with a thickness of min. 125 mm and EI120 or higher fire rating, and concrete ceilings with the thickness of at least 150 mm.

In the case of ductless installation, the valves have the resistance of EI120(ho i→o).

5.5.1. preparation of installation openings

in lightweight gypsum board walls

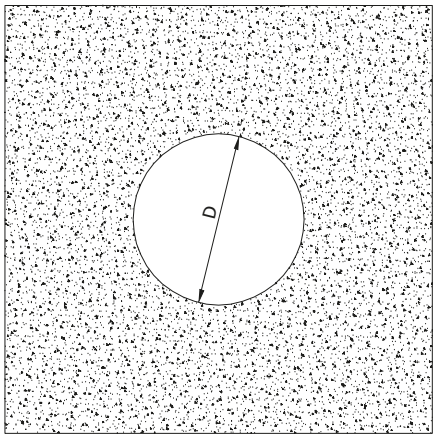

in rigid walls and ceilings

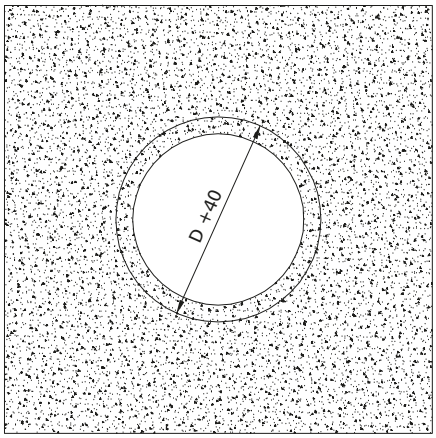

5.5.2. sample installation in lightweight walls of plaster-cardboard panels on a steel framework

duct installation

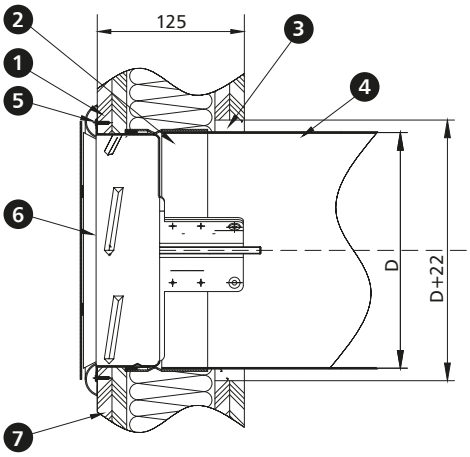

1. gypsum board panel
2. extension connecting pipe
3. sealing - plaster mortar*
4. ventilation duct
5. screw for gypsum board
6. mcr ZIPP valve
7. gypsum board partition wall

*it is possible to use a different sealing which ensures the required fire resistance

5.5.3. sample installation in rigid walls

duct installation

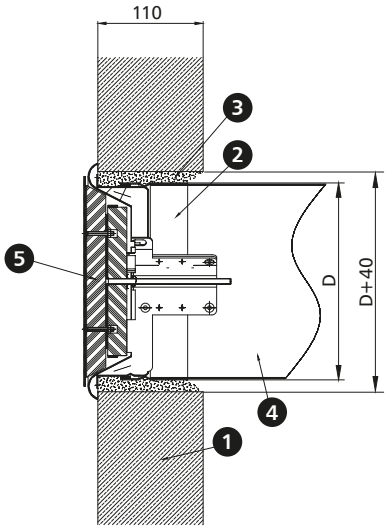

1. rigid concrete or masonry wall
2. extension connecting pipe
3. sealing - plaster or cement mortar*
4. duct
5. mcr ZIPP valve

*it is possible to use a different sealing which ensures the required fire resistance

5.5.4. sample installation in ceilings

duct installation

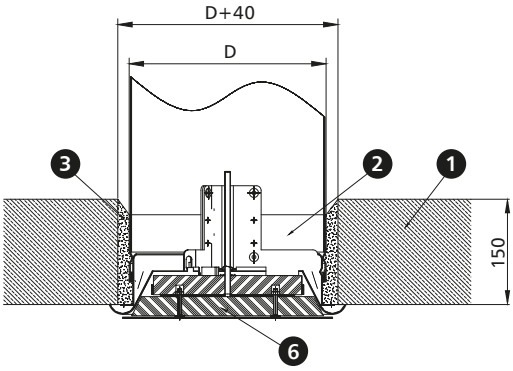

ductless installation

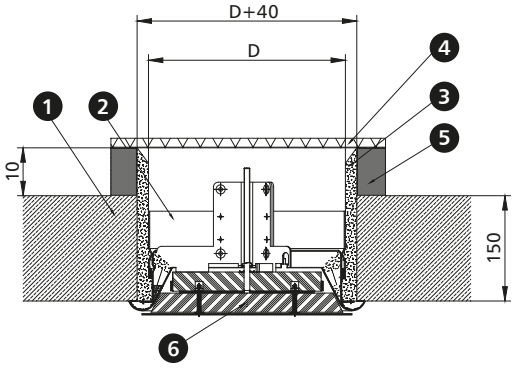

1. ceiling
2. extension connecting pipe
3. sealing - plaster or cement mortar*
4. duct cover (not included)
5. circumferential trim or duct cover with suitable height
6. mcr ZIPP valve

*it is possible to use a different sealing which ensures the required fire resistance

5.6. technical parameters of mcr ZIPP valves

Se – valve active cross-section [m^2]
Sk – duct cross-section [m^2]
D – nominal diameter [mm]

diameter D [mm]	100	125	160	200
Se	0.0027	0.0055	0.0111	0.0191
Sk	0.0079	0.0123	0.0201	0.0314

Flow characteristics

dp – pressure drop [Pa] **s** – valve opening [mm] **v** – velocity [m/s] **Q** – flow [m³/h]

mcr ZIPP 100 flow characteristics

supply

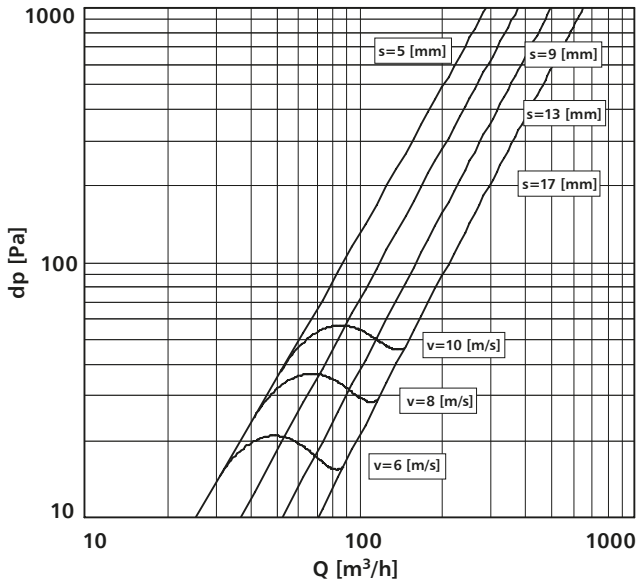

exhaust

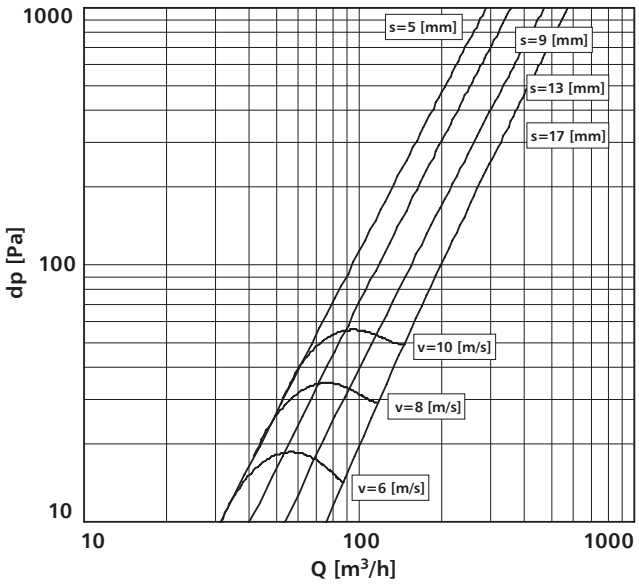

mcr ZIPP 125 flow characteristics

supply

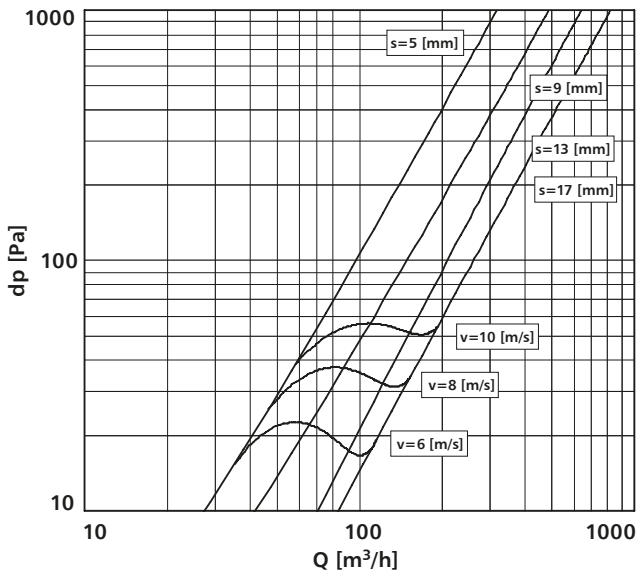

exhaust

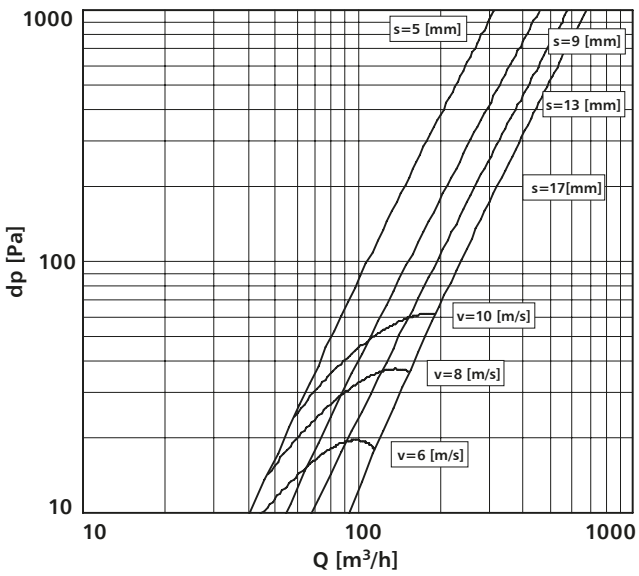

Flow characteristics

dp – pressure drop [Pa] **s** – valve opening [mm] **v** – velocity [m/s] **Q** – flow [m³/h]

mcr ZIPP 160 flow characteristics

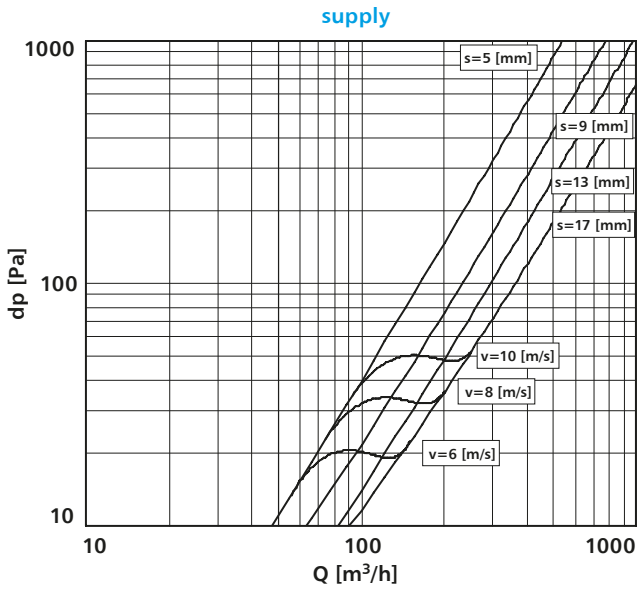

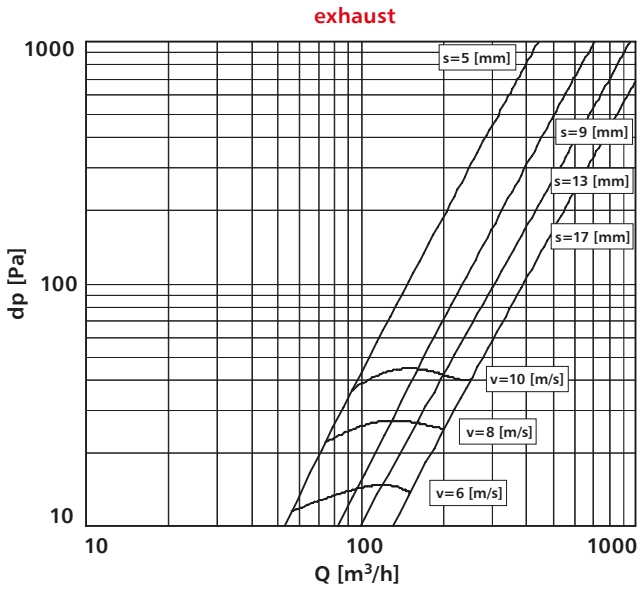

mcr ZIPP 200 flow characteristics

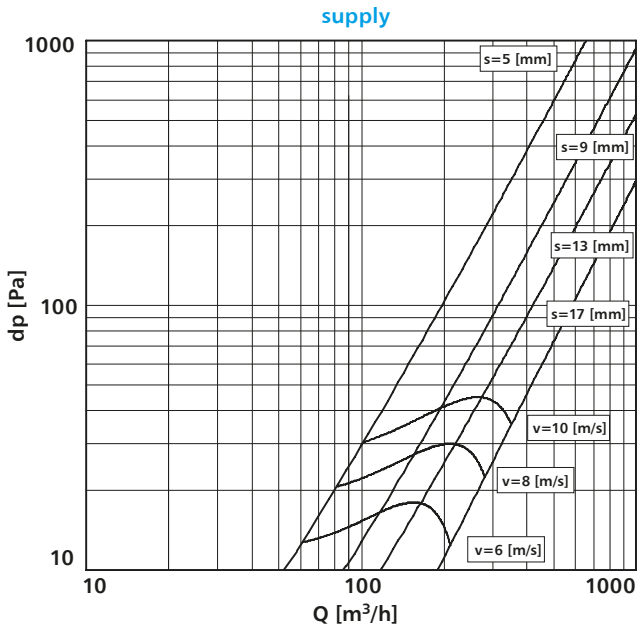

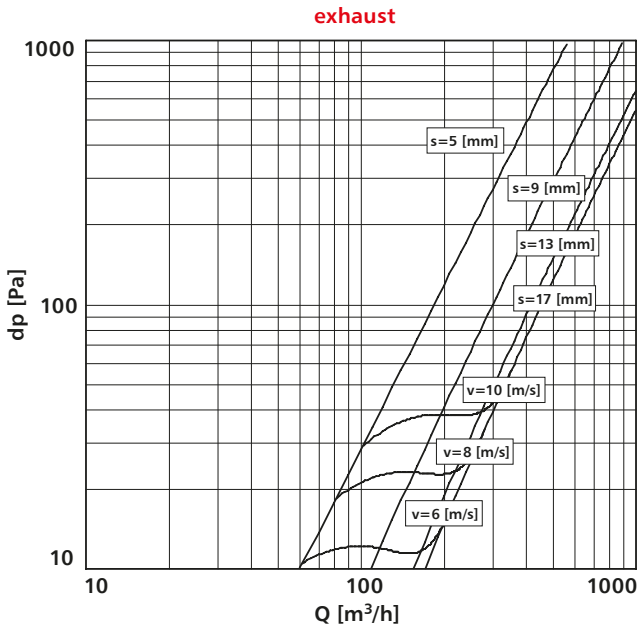

5.7. trigger control mechanisms – specifications and connection diagrams

manufacture type	RST	RST+WK1	RST+EKI	RST+EKP	MP230/24
thermal trigger	+	+	+	+	-
limit switch	-	250 V AC / 5A	250V AC / 5A	250 V AC / 5A	-
rated voltage	-	-	24 V DC	24 V DC	230 V AC / output 24 V DC
power consumption	-	-	3.5 W	1.8 W	2 W

electric connection diagram for the mcr ZIPP RST+WK1 valve

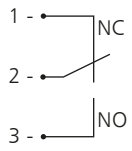

electric connection diagram for the mcr ZIPP RST+EKI valve or RST + EKP

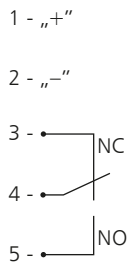

note: the position of limit switch in standby (open valve)

diagram and dimensions of the MP230/24 conversion unit

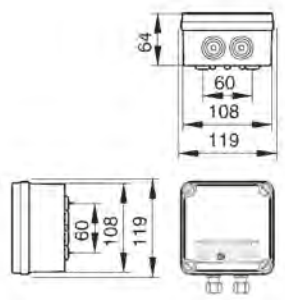

5.8. weights of the mcr ZIPP valves [kg]

D [mm]	RST	RST+EK
100	0.9	1
125	1.5	1.6
160	1.7	1.8
200	2.7	2.8

5.9. marking

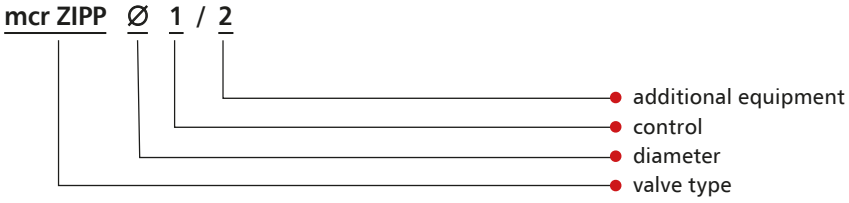

1 – control:

– RST trigger control mechanism
RST – thermal trigger

– RST+EK trigger control mechanism
RST+ EKI24 - thermal breaker + "pulse" type electromagnetic breaker, U = 24 V DC + limit switch (closed partition signalling)
RST+ EKP24 - thermal trigger + "break" type electromagnetic trigger, U = 24 V DC + limit switch (closed partition signalling)

2 – additional equipment:

WK1 – limit switch (closed damper blade signal)
MP230/24 – conversion unit – possible to power with the voltage of 230 V AC
RMK – extension connecting pipe
T95 – thermal trigger for 95°C

Note: The optional equipment should be entered, separated by a "/" sign

example marking:

mcr ZIPP ∅125 RST

EIS120 cut-off fire valve with a thermal trigger rated at 74°C.

mcr ZIPP ∅125 RST + WK1

EIS120 cut-off fire valve with a thermal trigger rated at 74°C and a limit switch.

mcr ZIPP ∅125 RST + EKP24

EIS120 cut-off fire valve with a thermal trigger rated at 74°C and a „break" electromagnetic trigger, U = 24 V DC and a limit switch.

mcr ZIPP ∅125 RST+EKI24+MP230/24

EIS120 cut-off fire valve with a thermal trigger rated at 74°C and a "pulse" electromagnetic trigger, U = 24 V DC and a limit switch and a voltage conversion unit from 230 V AC to 24 V DC.

mcr WIP/S

multi-blade cut-off fire dampers for comfort ventilation systems

PRODUCT CONFIGURATOR AND CAD MODELS/BIM AT WWW.MERCOR.COM.PL IN THE DESIGNER'S ZONE

BIM CAD

1396-CPR-0097

ATEST HIGIENICZNY

- EIS60, ES120
- **Certificate of constancy of performance 1396-CPR-0097.**
- **Dampers certified for compliance with EN 15650.**
- **Dampers qualified under EN 13501-3 and tested under EN 1366-2.**
- **Narrow louvered fire dampers.**

6.1. application

The mcr WIP/S multi-blade cut-off dampers are designed for use in general ventilation systems, where those systems pass through construction partitions. The mcr WIP/S fire dampers are intended for use especially in systems, where the components such as a silencer, bend or supply and extract grille are installed downstream of the fire damper, as the partition does not protrude beyond the damper casing.

During a fire, they preserve the fire resistance of the construction partition where ventilation and air conditioning ducts are routed through. Furthermore, they prevent the spreading of fire, smoke and burning fumes to the remaining part of the building which is not on fire. During normal system operation, the shutters are open. In case of fire, the shutters close.

In the version designed for explosion hazard zones (EX version), the dampers can operate in gas explosion hazard zone 1 inside and outside ventilation ducts, and dust explosion hazard zone 21 outside these ducts. The dampers have been certified in compliance with the ATEX directive 94/9/EC and meet the requirements of group II category 2G and -/2D:

II 2G Ex h IIC T6 Gb

II -/2D Ex h IIIC T72° -/Db

Ambient temperature: Ta: -20°... +50°C

6.2. design

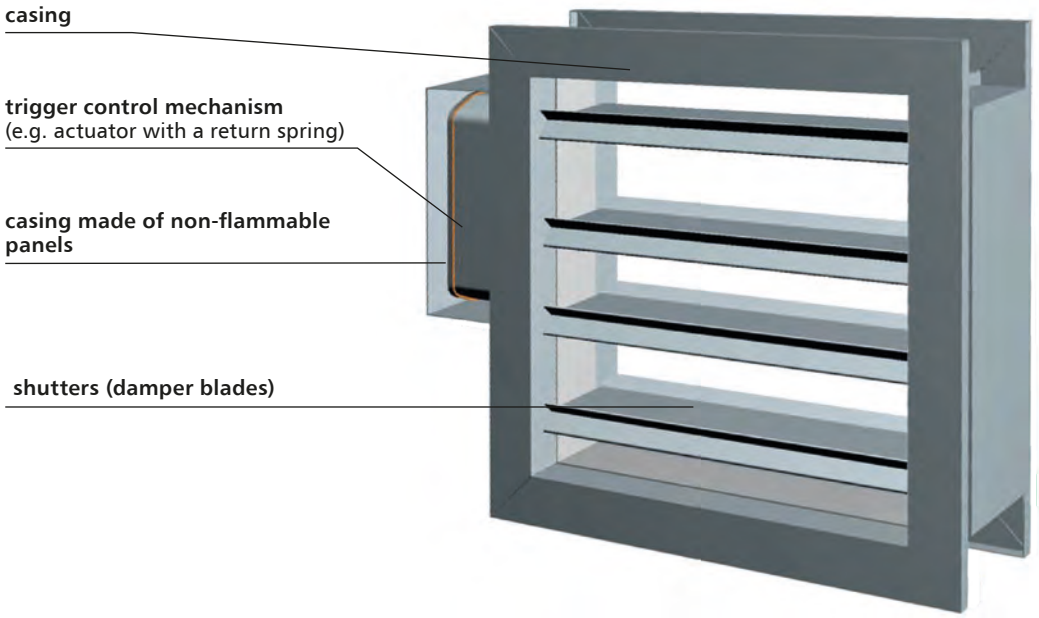

The mcr WIP/S cut-off dampers consist of a casing with a rectangular cross section, a moving multiple damper blades - shutters rotating on their axes and a trigger control mechanism which is tripped remotely or automatically by tripping a thermoelectric trigger. Damper casing is made of galvanised or stainless steel sheet. Its integral part is a flange of silicate-cement panels. The inner side of the fire damper casing is equipped with an intumescent gasket. The casing total length is 140 mm.

The shutter surface is covered with galvanised or stainless steel sheet. Each louver with the thickness of 15 mm is filled with a plaster panel. The damper blades revolve on their axes, which consist of two steel pins.

The dampers are made with 50 mm flanges that enable the correct installation of dampers in ventilation ducts. In a circular duct, the damper is made as square with a circular connection.

6.3. versions

6.3.1. mcr WIP/S – the cut-off fire damper for ventilation ducts with an actuator with a return spring – damper closing and opening with an actuator

During normal operation, the cut-off shutters of the fire damper remain open. In case of fire, the louvers close automatically or remotely by cutting off the power supply.

The mcr WIP/S dampers are equipped with a Belimo trigger control mechanisms **BFL**, **BFN**, **BF**, **BF-TL**, **EXBF** axial actuator with a return spring, powered with 24 V AC/DC or 230 V AC, with thermoelectric trigger 72°C (optionally it is possible to use triggers with the nominal tripping temperature of 95°C). The actuators are equipped with limit switches used to monitor the louver position, and furthermore, the mechanical position indicator is placed on the actuator.

Dampers with Belimo actuators: analogue BFL, BFN, BF, digital BF-TL, EXBF explosion proof actuators close as a result of thermoelectric trigger tripping or power supply cut-off as a result of the actuator return spring action. The dampers open when the power supply voltage is applied to the actuator terminals. Furthermore, dampers with those actuators may be opened manually using a key.

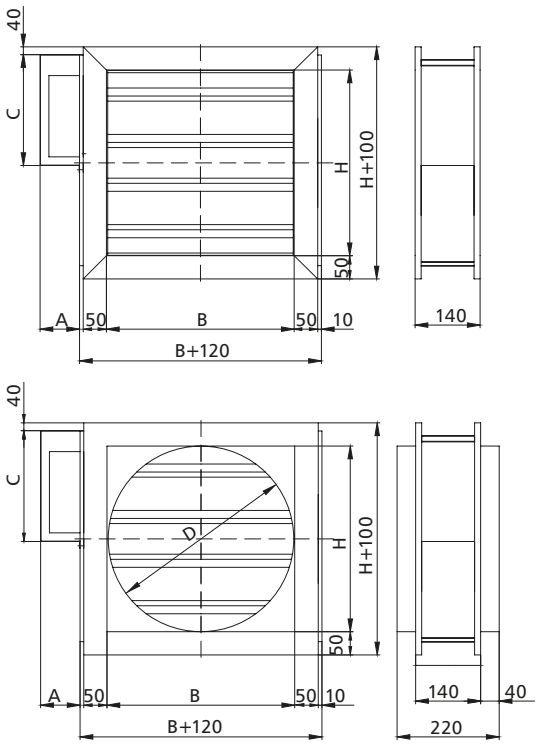

insert symmetrically in relation to the axis of the wall

mechanism	A	C
BFN	125	325
BFL	125	275
BF	125	325
BF24TL-ST	125	325
EXBF	175	400

6.3.2. mcr WIP/S – the cut-off fire damper for ventilation ducts with a spring drive and an integrated thermal trigger, optionally equipped with an electromagnetic trigger and limit switches

During normal operation, the cut-off shutters of the fire damper remain open. In case of fire, the shutters close automatically or, in case of a damper with an electromagnetic trigger, additionally using the fire automation.

The mcr WIP/S dampers are equipped with a **RST-KW1** trigger control mechanism with a drive spring and a cam-lever system. A thermal trigger 74°C (optionally at 95°C) is integrated into the damper mechanism. After the nominal temperature is exceeded, the thermal trigger is tripped and the louvers close. On the RST-KW1 mechanism, there is a mechanical indicator of blades position. It is possible to equip a trigger control mechanism with an electromagnetic trigger activated by the application ("pulse") or removal ("break") of the power supply voltage and with limit switches used to signal the blades position state. The mechanism features test and blades button-release functions. Blades re-opening is activated manually.

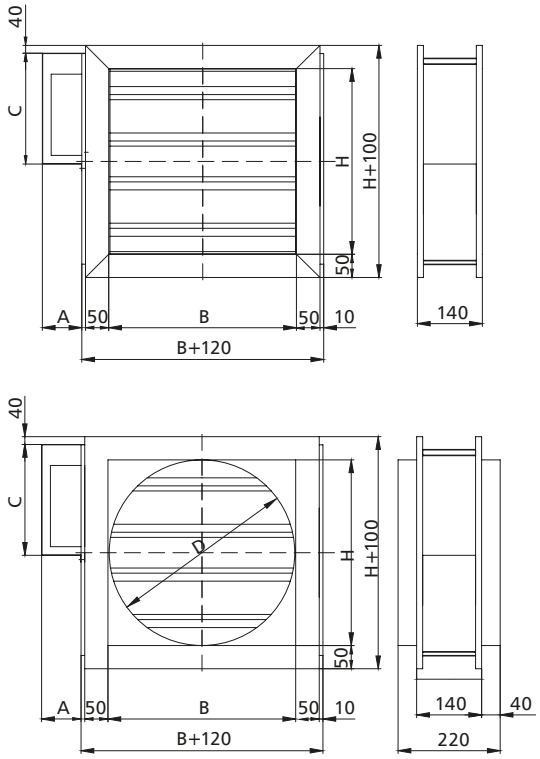

insert symmetrically in relation to the axis of the wall

mechanism	A	C
RST-KW1	165	275

6.4. dimensions

Rectangular dampers:

- nominal width B: from 120 mm to 1000 mm
- nominal height H: from 160 mm to 1000 mm
- the maximum cross-section surface of one damper up to 1 m^2

Apart from the standard dimensions, fire dampers may be manufactured with intermediate dimensions (in 1 mm increments, in the given range). The exception are dampers whose height value falls within the 36-54 ranges, e.g. 136-154, 236-254...

Square fire dampers may also be fitted with round connectors for the spigot connection to the round ducts.

6.5. installation

Rectangular mcr WIP/S fire dampers are class EI60(ve i↔o)S and E120(ve i↔o)S-rated devices, when installed in a concrete partition, min. 110 mm thick, partitions made of full bricks or cellular blocks, min. thickness of 115 mm.

6.5.1. preparation of installation openings

The minimum dimensions of the installation opening that permits correct installation of the mcr WIP/S damper is:

Bo = (A+Bz+80) mm
Ho = (H+180) mm

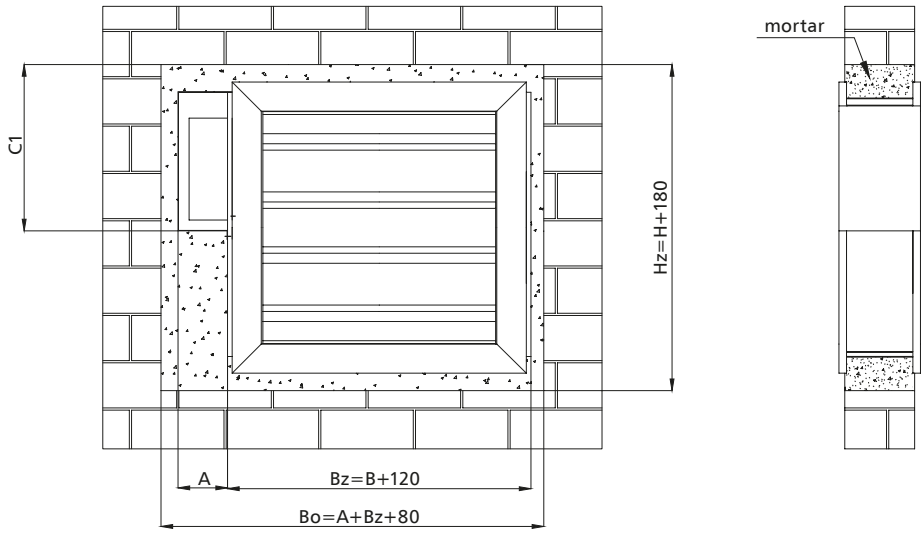

mechanism	BF	BFL	BFN	RST-KW1	EXBF
C1 [mm]	385	335	385	335	460
A [mm]	125	125	125	165	175

6.5.2. sample installation in concrete or masonry walls

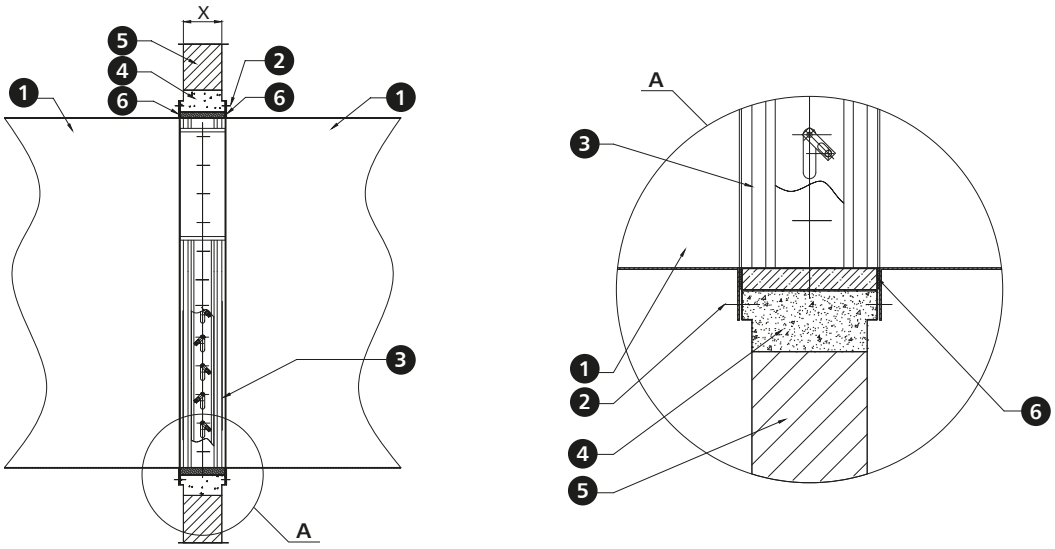

1. ventilation duct
2. ST4.2x16 sheet metal screw
3. mcr WIP damper
5. masonry wall
4. sealing - e.g. cement masonry mortar*
6. heat resistant gasket

X. wall thickness

*it is possible to use a different sealing which ensures the required fire resistance

6.5.3. sample installation in concrete block or full brick walls

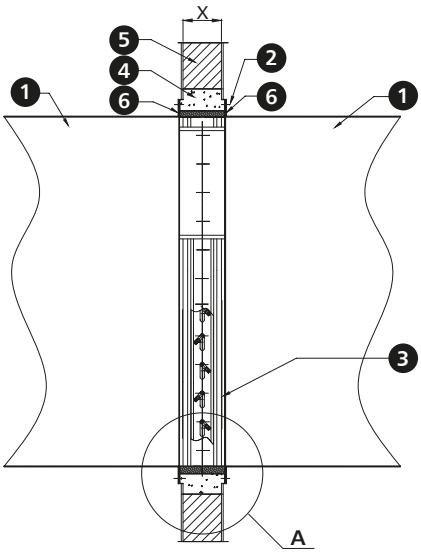

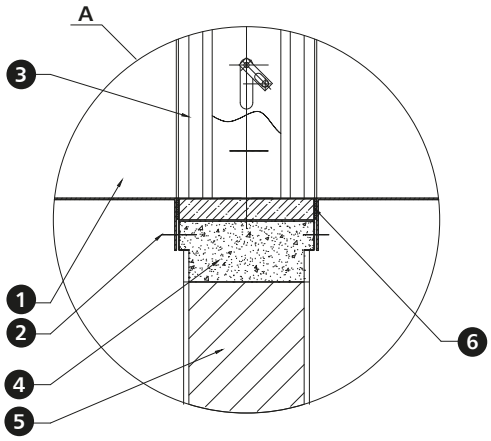

1. ventilation duct
2. sheet metal screw ST4.2 2x16
3. mcr WIP damper
4. sealing – e.g. cement masonry mortar*
5. wall of concrete blocks or full bricks
6. heat resistant gasket
X. wall thickness

*it is possible to use a different sealing which ensures the required fire resistance

6.5.4. sample installation in lightweight walls

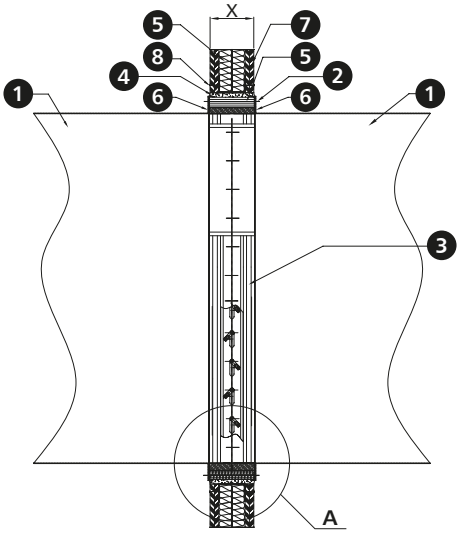

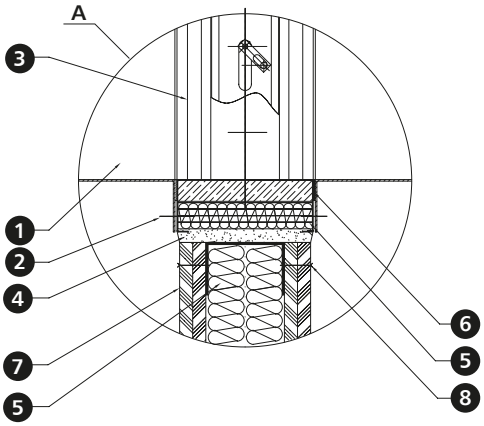

1. ventilation duct
2. sheet metal screw ST4.2 2x16
3. mcr WIP damper
4. sealing - cement masonry mortar*
5. mineral wool with the density of at least 80 kg/m^3, A1 class
6. heat resistant gasket
7. lightweight wall
8. ST5.5x38 screw
X. wall thickness

*it is possible to use a different sealing which ensures the required fire resistance

6.5.5. sample installation in ceiling

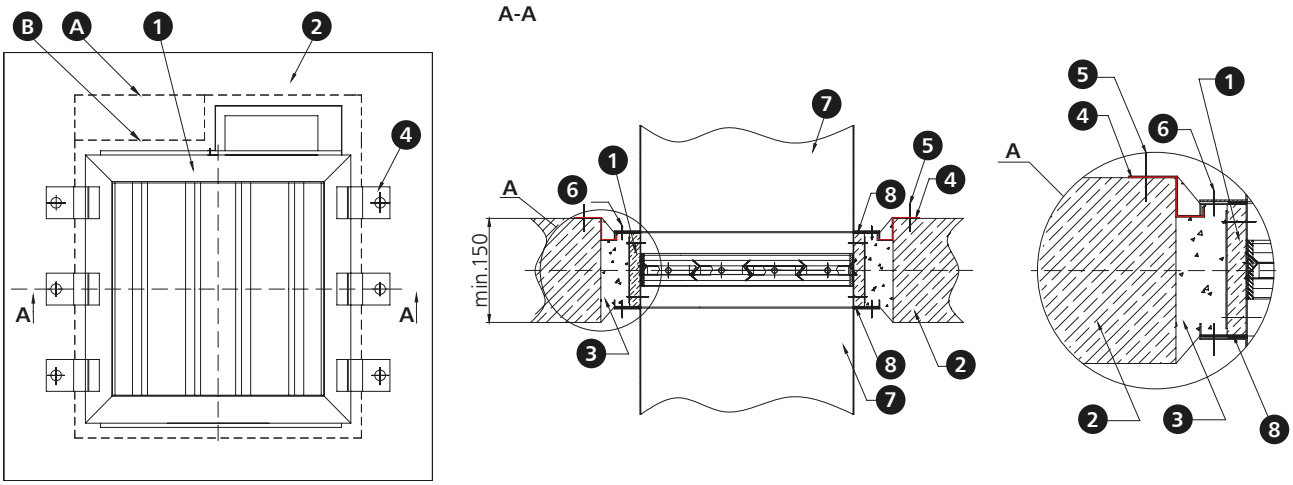

1. mcr WIP damper
2. ceiling
3. e.g. cement mortar*
4. mounting bracket
5. steel expansion anchor with M6 metal screw
6. sheet metal screw ST4.2 2x16
7. ventilation duct
8. heat resistant gasket

A./B. construction opening

*it is possible to use a different sealing which ensures the required fire resistance

6.5.6 sample module installation

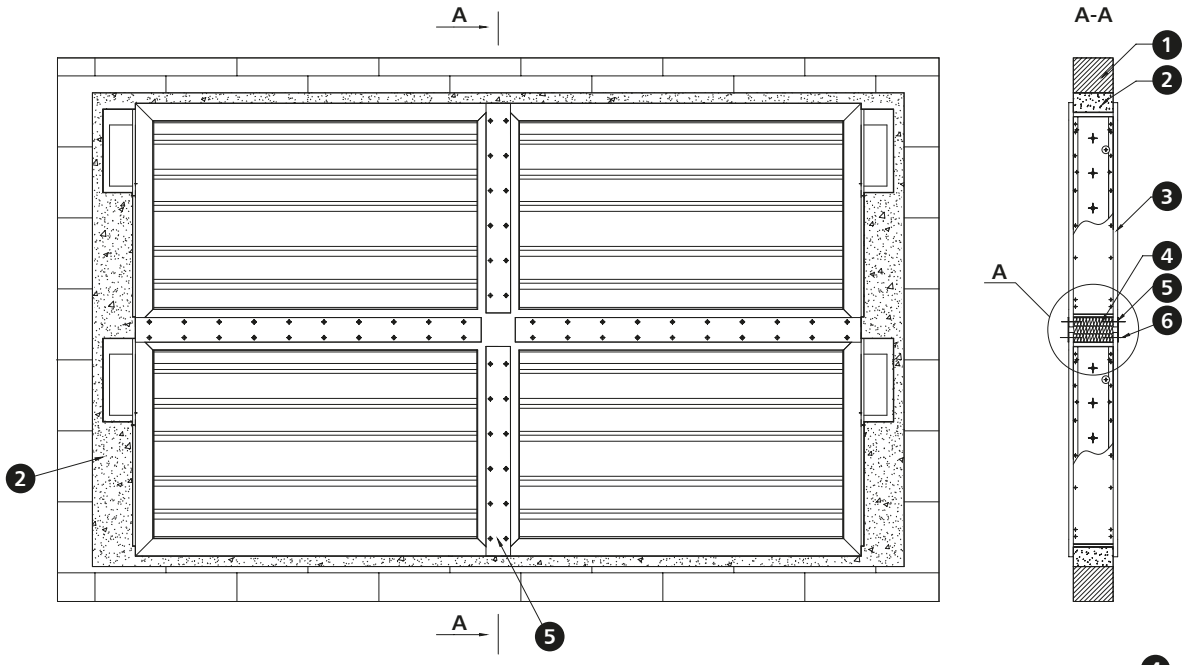

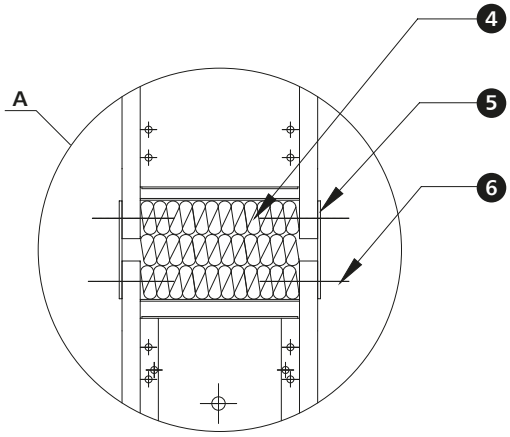

1. e.g. masonry wall
2. sealing - e.g. cement*
3. mcr WIP damper module
4. mineral wool with the density of at least 80 kg/m^3, A1 class
5. installation flat bar with the width of 70 mm
6. ST8x16 screw

*it is possible to use a different sealing which ensures the required fire resistance

6.5.7. sample installation outside the fire partition

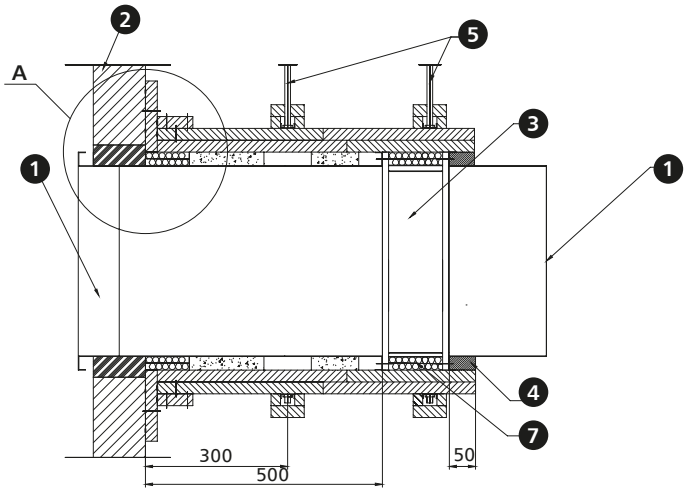

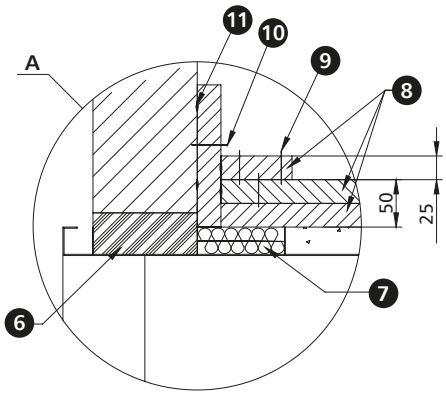

1. ventilation duct
2. partition wall
3. mcr WIP damper
4. gypsum infill
5. duct suspension
6. sealing (cement or cement-lime masonry mortar)*
7. mineral wool with the density of at least 80 kg/m^3, A1 class
8. fire protection material ensuring EI120S fire rating or higher
9. screws 3.5 x 50 at ~150 mm centres
10. steel expansion anchor Ø8 x 80 mm
11. board joints sealed with Conlit Glue

*it is possible to use a different sealing which ensures the required fire resistance

Fire damper installation with vertical rotation axis of the louvers

The fire damper can operate with a vertical axis of louver rotation with the top or bottom-mounted mechanism.

Distance between systems and partitions

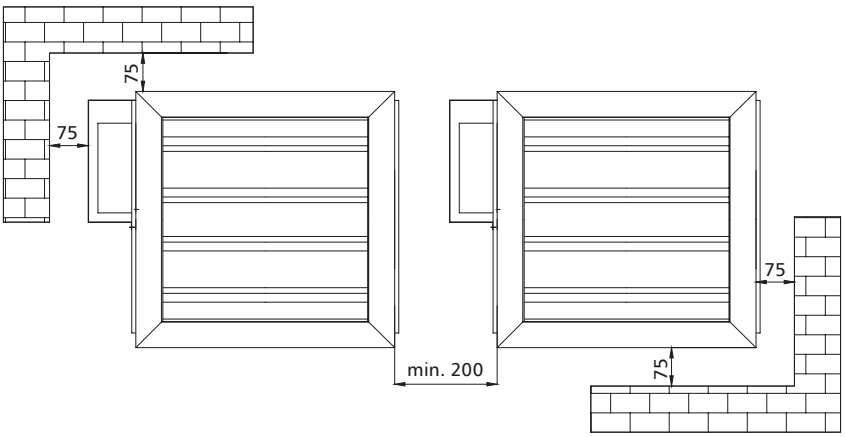

Example applications - installation with a duct cover

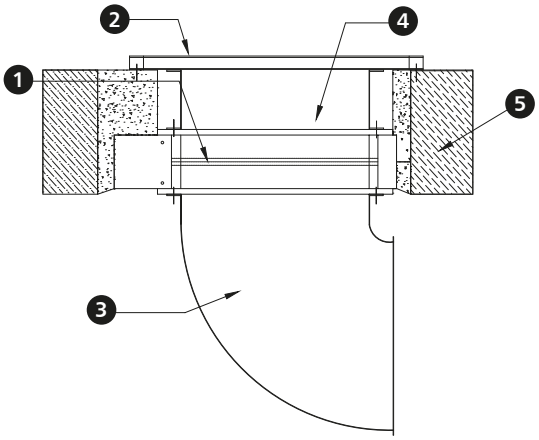

1. mcr WIP damper
2. duct cover
3. ventilation duct
4. duct - ventilation straight connection piece
5. wall, ceiling

For mcr WIP/S fire damper with louvers (no single-blade), available free space in front or behind of the fire damper can be used for the installation of its system components including the masking cover, silencer or leading the duct along the wall, using bends or reducer couplings.

6.6. technical parameters of mcr WIP/S rectangular dampers

B – nominal width [mm]
H – nominal height [mm]

v – velocity [m/s]
Sk – duct cross-section [m²]
Se – damper active cross-section [m²]

Q – flow [m³/h]
dp – pressure drop [Pa]
L_{WA} – damper noise level [dB]

			height H [mm]														
			200					250					300				
		v [m/s]	Sk [m²]	Se [m²]	Q [m³/h]	dp [Pa]	L_{WA} [dB]	Sk [m²]	Se [m²]	Q [m³/h]	dp [Pa]	L_{WA} [dB]	Sk [m²]	Se [m²]	Q [m³/h]	dp [Pa]	L_{WA} [dB]
width B [mm]	200	4	0.040	0.034	490	6	26	0.050	0.043	612	6	26	0.06	0.051	734	6	27
		6			734	13	36			918	13	37			1 102	13	37
		8			979	24	44			1 224	23	44			1 469	22	45
		10			1 224	37	49			1 530	36	50			1 836	35	50
	250	4	0.050	0.043	612	6	26	0.063	0.053	765	6	27	0.075	0.064	918	6	28
		6			918	13	37			1 148	13	38			1 377	13	38
		8			1 224	23	44			1 530	23	45			1 836	22	46
		10			1 530	36	50			1 913	36	51			2 295	35	51
	300	4	0.060	0.051	734	6	27	0.075	0.064	918	6	28	0.09	0.077	1 102	6	28
		6			1 102	13	37			1 377	13	38			1 652	13	39
		8			1 469	23	45			1 836	23	46			2 203	22	46
		10			1 836	36	51			2 295	36	52			2 754	35	52
	350	4	0.070	0.060	857	6	27	0.088	0.074	1 071	36	52	0.105	0.089	1 285	5	29
		6			1 285	13	38			1 607	13	39			1 928	12	39
		8			1 714	22	45			2 142	22	46			2 570	22	47
		10			2 142	35	51			2 678	35	52			3 213	34	52
	400	4	0.080	0.068	979	6	28	0.100	0.085	1 224	6	29	0.12	0.102	1 469	5	29
		6			1 469	13	38			1 836	13	39			2 203	12	40
		8			1 958	22	46			2 448	22	47			2 938	22	47
		10			2 448	35	52			3 060	35	53			3 672	34	53
	450	4	0.090	0.077	1 102	6	28	0.113	0.096	1 377	6	29	0.135	0.115	1 652	5	30
		6			1 652	13	39			2 066	13	40			2 479	12	40
		8			2 203	22	46			2 754	22	47			3 305	22	48
		10			2 754	35	52			3 443	35	53			4 131	34	54
	500	4	0.100	0.085	1 224	5	28	0.125	0.106	1 530	5	29	0.15	0.128	1 836	5	30
		6			1 836	12	39			2 295	12	40			2 754	12	40
		8			2 448	22	46			3 060	22	47			3 672	21	48
		10			3 060	34	52			3 825	34	53			4 590	33	54
	550	4	0.110	0.094	1 346	5	29	0.138	0.117	1 683	5	30	0.165	0.140	2 020	5	31
		6			2 020	12	39			2 525	12	40			3 029	12	41
		8			2 693	22	47			3 366	22	48			4 039	22	49
		10			3 366	34	53			4 208	34	54			5 049	34	54
	600	4	0.120	0.102	1 469	5	29	0.150	0.128	1 836	5	30	0.18	0.153	2 203	5	31
		6			2 203	12	40			2 754	12	41			3 305	12	41
		8			2 938	22	47			3 672	22	48			4 406	21	49
		10			3 672	34	53			4 590	34	54			5 508	33	54
	650	4	0.130	0.111	1 591	5	30	0.163	0.138	1 989	5	30	0.195	0.166	2 387	5	31
		6			2 387	12	40			2 984	12	41			3 580	12	41
		8			3 182	22	48			3 978	22	49			4 774	21	49
		10			3 978	34	53			4 973	34	54			5 967	33	55
	700	4	0.140	0.119	1 714	5	30	0.175	0.149	2 142	5	31	0.21	0.179	2 570	5	31
		6			2 570	12	40			3 213	12	41			3 856	12	42
		8			3 427	22	48			4 284	22	49			5 141	21	49
		10			4 284	34	54			5 355	34	55			6 426	33	55
	750	4	0.150	0.128	1 836	5	30	0.188	0.159	2 295	5	31	0.225	0.191	2 754	5	31
		6			2 754	12	40			3 443	12	41			4 131	12	42
		8			3 672	21	48			4 590	21	49			5 508	21	49
		10			4 590	33	54			5 738	33	55			6 885	32	55
	800	4	0.160	0.136	1 958	5	30	0.200	0.170	2 448	5	31	0.24	0.204	2 938	5	31
		6			2 938	12	41			3 672	12	42			4 406	12	42
		8			3 917	21	48			4 896	21	49			5 875	21	49
		10			4 896	33	54			6 120	33	55			7 344	32	55
	850	4	0.170	0.145	2 081	5	30	0.213	0.181	2 601	5	31	0.255	0.217	3 121	5	31
		6			3 121	12	40			3 902	12	41			4 682	11	42
		8			4 162	21	48			5 202	21	49			6 242	20	49
		10			5 202	32	54			6 503	32	55			7 803	31	55
	900	4	0.180	0.153	2 203	5	30	0.225	0.191	2 754	5	31	0.27	0.230	3 305	5	31
		6			3 305	12	41			4 131	12	42			4 957	11	42
		8			4 406	21	48			5 508	21	49			6 610	20	50
		10			5 508	32	54			6 885	32	55			8 262	31	55
	1000	4	0.200	0.170	2 448	5	31	0.250	0.213	3 060	5	32	0.3	0.255	3 672	5	32
		6			3 672	12	41			4 590	12	42			5 508	11	43
		8			4 896	21	49			6 120	21	50			7 344	20	50
		10			6 120	32	54			7 650	32	55			9 180	31	56

6.6. technical parameters of mcr WIP/S rectangular dampers

B – nominal width [mm]
H – nominal height [mm]

v – velocity [m/s]
Sk – duct cross-section [m²]
Se – damper active cross-section [m²]

Q – flow [m³/h]
dp – pressure drop [Pa]
L_{WA} – damper noise level [dB]

			height H [mm]														
			350					400					450				
		v [m/s]	Sk [m²]	Se [m²]	Q [m³/h]	dp [Pa]	L_{WA} [dB]	Sk [m²]	Se [m²]	Q [m³/h]	dp [Pa]	L_{WA} [dB]	Sk [m²]	Se [m²]	Q [m³/h]	dp [Pa]	L_{WA} [dB]
width B [mm]	200	4	0.070	0.060	857	6	27	0.080	0.068	979	5	27	0.090	0.077	1 102	5	28
		6			1 285	13	38			1 469	12	38			1 652	12	38
		8			1 714	22	45			1 958	22	45			2 203	22	46
		10			2 142	35	51			2 448	34	51			2 754	34	52
	250	4	0.088	0.074	1 071	6	28	0.100	0.085	1 224	5	28	0.113	0.096	1 377	5	29
		6			1 607	13	39			1 836	12	39			2 066	12	39
		8			2 142	22	46			2 448	22	46			2 754	22	47
		10			2 678	35	52			3 060	34	52			3 443	34	53
	300	4	0.105	0.089	1 285	6	29	0.120	0.102	1 469	5	29	0.135	0.115	1 652	5	30
		6			1 928	13	40			2 203	12	40			2 479	12	40
		8			2 570	22	47			2 938	22	47			3 305	22	48
		10			3 213	35	53			3 672	34	53			4 131	34	54
	350	4	0.123	0.104	1 499	5	29	0.140	0.119	1 714	5	29	0.158	0.134	1 928	5	30
		6			2 249	12	40			2 570	12	40			2 892	12	41
		8			2 999	22	47			3 427	21	48			3 856	21	48
		10			3 749	34	53			4 284	33	53			4 820	33	54
	400	4	0.140	0.119	1 714	5	30	0.160	0.136	1 958	5	30	0.180	0.153	2 203	5	31
		6			2 570	12	40			2 938	12	41			3 305	12	41
		8			3 427	22	48			3 917	21	48			4 406	21	49
		10			4 284	34	54			4 896	33	54			5 508	33	54
	450	4	0.158	0.134	1 928	5	30	0.180	0.153	2 203	5	31	0.203	0.172	2 479	5	31
		6			2 892	12	41			3 305	12	41			3 718	12	42
		8			3 856	22	48			4 406	21	49			4 957	21	49
		10			4 820	34	54			5 508	33	54			6 197	33	55
	500	4	0.175	0.149	2 142	5	30	0.200	0.170	2 448	5	31	0.225	0.191	2 754	5	32
		6			3 213	12	41			3 672	12	42			4 131	12	42
		8			4 284	21	48			4 896	21	49			5 508	21	50
		10			5 355	33	54			6 120	33	55			6 885	33	55
	550	4	0.193	0.164	2 570	5	31	0.220	0.187	2 693	5	31	0.248	0.210	3 029	5	32
		6			3 856	12	42			4 039	12	42			4 544	12	43
		8			5 141	22	49			5 386	21	49			6 059	21	50
		10			6 426	34	55			6 732	33	55			7 574	33	56
	600	4	0.210	0.179	2 570	5	31	0.240	0.204	2 938	4	28	0.270	0.230	3 305	5	32
		6			3 856	12	42			4 406	8	37			4 957	12	42
		8			5 141	21	49			5 875	14	44			6 610	21	50
		10			6 426	33	55			7 344	32	55			8 262	32	56
	650	4	0.228	0.193	2 785	5	32	0.260	0.221	3 182	5	32	0.293	0.249	3 580	5	32
		6			4 177	12	42			4 774	12	42			5 370	12	43
		8			5 569	21	50			6 365	21	50			7 160	21	50
		10			6 962	33	55			7 956	32	56			8 951	32	56
	700	4	0.245	0.208	2 999	5	32	0.28	0.238	3 427	5	32	0.315	0.268	3 856	5	33
		6			4 498	12	42			5 141	12	43			5 783	12	43
		8			5 998	21	50			6 854	21	50			7 711	21	51
		10			7 497	33	56			8 568	32	56			9 639	32	56
	750	4	0.263	0.223	3 213	5	32	0.3	0.255	3 672	5	32	0.338	0.287	4 131	5	33
		6			4 820	12	42			5 508	12	43			6 197	12	43
		8			6 426	21	50			7 344	21	50			8 262	21	51
		10			8 033	32	56			9 180	32	56			10 328	32	57
	800	4	0.280	0.238	3 427	5	32	0.32	0.272	3 917	5	33	0.360	0.306	4 406	5	32
		6			5 141	12	43			5 875	11	43			6 610	11	42
		8			6 854	21	50			7 834	20	50			8 813	20	50
		10			8 568	32	56			9 792	31	56			11 016	31	56
	850	4	0.298	0.253	3 641	5	32	0.34	0.289	4 162	5	32	0.383	0.325	4 682	5	31
		6			5 462	11	42			6 242	11	43			7 023	11	42
		8			7 283	20	50			8 323	19	50			9 364	19	49
		10			9 104	31	56			10 404	30	56			11 705	30	55
	900	4	0.315	0.268	3 856	5	32	0.360	0.306	4 406	6	35	0.405	0.344	4 957	5	31
		6			5 783	11	43			6 610	12	44			7 436	11	42
		8			7 711	20	50			8 813	26	54			9 914	19	49
		10			9 639	31	56			11 016	30	56			12 393	30	55
	1000	4	0.350	0.298	4 284	5	33	0.400	0.340	4 896	5	33	0.450	0.383	5 508	5	31
		6			6 426	11	43			7 344	11	43			8 262	11	42
		8			8 568	20	51			9 792	19	51			11 016	19	49
		10			10 710	31	56			12 240	30	57			13 770	30	55

6.6. technical parameters of mcr WIP/S rectangular dampers

B – nominal width [mm]
H – nominal height [mm]

v – velocity [m/s]
Sk – duct cross-section [m²]
Se – damper active cross-section [m²]

Q – flow [m³/h]
dp – pressure drop [Pa]
L_{WA} – damper noise level [dB]

			height H [mm]														
			500					550					600				
		v [m/s]	Sk [m²]	Se [m²]	Q [m³/h]	dp [Pa]	L_{WA} [dB]	Sk [m²]	Se [m²]	Q [m³/h]	dp [Pa]	L_{WA} [dB]	Sk [m²]	Se [m²]	Q [m³/h]	dp [Pa]	L_{WA} [dB]
width B [mm]	200	4	0.100	0.085	1 224	5	28	0.110	0.094	1 346	5	28	0.120	0.102	1 469	5	28
		6			1 836	12	39			2 020	12	39			2 203	12	39
		8			2 448	21	46			2 693	21	46			2 938	21	46
		10			3 060	33	52			3 366	33	52			3 672	32	52
	250	4	0.125	0.106	1 530	5	29	0.138	0.117	1 683	5	29	0.150	0.128	1 836	5	29
		6			2 295	12	40			2 525	12	40			2 754	12	40
		8			3 060	21	47			3 366	21	47			3 672	21	47
		10			3 825	33	53			4 208	33	53			4 590	32	53
	300	4	0.150	0.128	1 836	5	30	0.165	0.140	2 020	5	30	0.180	0.153	2 203	5	30
		6			2 754	12	40			3 029	12	41			3 305	12	41
		8			3 672	21	48			4 039	21	48			4 406	21	48
		10			4 590	33	54			5 049	33	54			5 508	32	54
	350	4	0.175	0.149	2 142	5	30	0.193	0.164	2 356	5	30	0.210	0.179	2 570	5	30
		6			3 213	12	41			3 534	12	41			3 856	11	41
		8			4 284	21	48			4 712	21	49			5 141	20	48
		10			5 355	32	54			5 891	32	54			6 426	31	54
	400	4	0.200	0.170	2 448	5	31	0.220	0.187	2 693	5	31	0.240	0.204	2 938	5	31
		6			3 672	12	41			4 039	12	42			4 406	11	42
		8			4 896	21	49			5 386	21	49			5 875	20	49
		10			6 120	32	54			6 732	32	55			7 344	31	55
	450	4	0.225	0.191	2 754	5	31	0.248	0.210	3 029	5	32	0.270	0.230	3 305	5	31
		6			4 131	12	42			4 544	12	42			4 957	11	42
		8			5 508	21	49			6 059	21	50			6 610	20	50
		10			6 885	32	55			7 574	32	55			8 262	31	55
	500	4	0.250	0.213	3 060	5	31	0.275	0.234	3 366	5	32	0.300	0.255	3 672	5	32
		6			4 590	11	42			5 049	12	43			5 508	11	43
		8			6 120	22	51			6 732	21	50			7 344	20	50
		10			7 650	32	55			8 415	32	56			9 180	31	56
	550	4	0.275	0.234	3 672	5	32	0.303	0.257	4 039	5	32	0.330	0.281	4 406	5	32
		6			5 508	12	43			6 059	12	43			6 610	11	43
		8			7 344	21	50			8 078	21	50			8 813	20	50
		10			9 180	32	56			10 098	32	56			11 016	31	56
	600	4	0.300	0.255	3 672	5	32	0.330	0.281	4 039	5	32	0.360	0.306	4 406	5	32
		6			5 508	11	43			6 059	11	43			6 610	11	43
		8			7 344	20	50			8 078	20	50			8 813	19	50
		10			9 180	31	56			10 098	31	56			11 016	30	56
	650	4	0.325	0.276	3 978	5	33	0.358	0.304	4 376	5	33	0.390	0.332	4 774	5	33
		6			5 967	12	43			6 564	11	43			7 160	11	43
		8			7 956	21	51			8 752	20	51			9 547	19	51
		10			9 945	31	56			10 940	31	57			11 934	30	57
	700	4	0.350	0.298	4 284	5	33	0.385	0.327	4 712	5	33	0.420	0.357	5 141	5	33
		6			6 426	11	43			7 069	11	44			7 711	11	44
		8			8 568	20	51			9 425	20	51			10 282	19	51
		10			10 710	31	56			11 781	31	57			12 852	30	57
	750	4	0.375	0.319	4 590	5	33	0.413	0.351	5 049	5	33	0.450	0.383	5 508	5	33
		6			6 885	11	43			7 574	11	44			8 262	11	44
		8			9 180	20	51			10 098	20	51			11 016	19	51
		10			11 475	31	57			12 623	31	57			13 770	30	57
	800	4	0.400	0.340	4 896	5	32	0.440	0.374	5 386	5	33	0.480	0.408	5 875	5	33
		6			7 344	11	43			8 078	11	44			8 813	10	44
		8			9 792	19	51			10 771	19	51			11 750	19	51
		10			12 240	30	56			13 464	30	57			14 688	29	57
	850	4	0.425	0.361	5 202	5	32	0.468	0.397	5 722	5	33	0.510	0.434	6 242	4	33
		6			7 803	10	43			8 583	10	44			9 364	10	43
		8			10 404	19	50			11 444	19	51			12 485	18	51
		10			13 005	29	56			14 306	29	57			15 606	28	57
	900	4	0.450	0.383	5 508	5	32	0.495	0.421	6 059	5	33	0.540	0.459	6 610	4	33
		6			8 262	10	43			9 088	10	44			9 914	10	41
		8			11 016	19	50			12 118	19	51			13 219	18	49
		10			13 770	29	56			15 147	29	57			16 524	28	54
	1000	4	0.500	0.425	6 120	5	32	0.550	0.468	6 059	5	34	0.600	0.510	7 344	4	34
		6			9 180	10	43			9 088	10	44			11 016	10	44
		8			12 240	19	50			12 118	19	52			14 688	18	52
		10			15 300	29	56			15 147	29	58			18 360	28	57

6.6. technical parameters of mcr WIP/S rectangular dampers

B – nominal width [mm]
H – nominal height [mm]

v – velocity [m/s]
Sk – duct cross-section [m²]
Se – damper active cross-section [m²]

Q – flow [m³/h]
dp – pressure drop [Pa]
L_{WA} – damper noise level [dB]

			height H [mm]														
			650					700					750				
		v [m/s]	Sk [m²]	Se [m²]	Q [m³/h]	dp [Pa]	L_{WA} [dB]	Sk [m²]	Se [m²]	Q [m³/h]	dp [Pa]	L_{WA} [dB]	Sk [m²]	Se [m²]	Q [m³/h]	dp [Pa]	L_{WA} [dB]
width B [mm]	200	4	0.130	0.111	1 591	5	29	0.140	0.119	1 714	5	29	0.150	0.128	1 836	5	29
		6			2 387	12	39			2 570	11	39			2 754	11	40
		8			3 182	21	47			3 427	20	47			3 672	20	47
		10			3 978	32	53			4 284	31	52			4 590	31	53
	250	4	0.163	0.138	1 989	5	30	0.175	0.149	2 142	5	30	0.188	0.159	2 295	5	30
		6			2 984	12	40			3 213	11	40			3 443	11	40
		8			3 978	21	48			4 284	20	48			4 590	20	48
		10			4 973	32	54			5 355	31	53			5 738	31	54
	300	4	0.195	0.166	2 387	5	30	0.210	0.179	2 570	5	30	0.225	0.191	2 754	5	31
		6			3 580	12	41			3 856	11	41			4 131	11	41
		8			4 774	21	49			5 141	20	48			5 508	20	49
		10			5 967	32	54			6 426	31	54			6 885	31	55
	350	4	0.228	0.193	2 785	5	31	0.245	0.208	2 999	5	31	0.263	0.223	3 213	5	31
		6			4 177	11	41			4 498	11	41			4 820	11	42
		8			5 569	20	49			5 998	19	49			6 426	19	49
		10			6 962	31	55			7 497	30	54			8 033	30	55
	400	4	0.260	0.221	3 182	5	31	0.280	0.238	3 427	5	31	0.300	0.255	3 672	5	32
		6			4 774	11	42			5 141	11	42			5 508	11	42
		8			6 365	20	49			6 854	19	49			7 344	19	50
		10			7 956	31	55			8 568	30	55			9 180	30	55
	450	4	0.293	0.249	3 580	5	32	0.315	0.268	3 856	5	32	0.338	0.287	4 131	5	32
		6			5 370	11	42			5 783	11	42			6 197	11	43
		8			7 160	20	50			7 711	19	50			8 262	19	50
		10			8 951	31	56			9 639	30	56			10 328	30	56
	500	4	0.325	0.276	3 978	5	32	0.350	0.298	4 284	5	32	0.375	0.319	4 590	5	32
		6			5 967	11	43			6 426	11	43			6 885	11	43
		8			7 956	20	50			8 568	19	50			9 180	19	51
		10			9 945	31	56			10 710	30	56			11 475	30	56
	550	4	0.358	0.304	4 774	5	33	0.385	0.327	4 712	5	33	0.413	0.351	5 049	5	33
		6			7 160	11	43			7 069	11	43			7 574	11	43
		8			9 547	20	51			9 425	19	51			10 098	19	51
		10			11 934	31	57			11 781	30	56			12 623	30	57
	600	4	0.390	0.332	4 774	5	33	0.420	0.357	5 141	5	33	0.450	0.383	5 508	5	33
		6			7 160	11	44			7 711	11	44			8 262	11	44
		8			9 547	20	51			10 282	19	51			11 016	19	51
		10			11 934	31	57			12 852	30	57			13 770	30	57
	650	4	0.423	0.359	5 171	5	33	0.455	0.387	5 569	5	33	0.488	0.414	5 967	5	33
		6			7 757	11	44			8 354	10	43			8 951	10	44
		8			10 343	19	51			11 138	19	51			11 934	19	51
		10			12 929	30	57			13 923	29	57			14 918	29	57
	700	4	0.455	0.387	5 569	5	33	0.490	0.417	5 998	5	33	0.525	0.446	6 426	5	34
		6			8 354	11	44			8 996	10	44			9 639	10	44
		8			11 138	19	51			11 995	19	51			12 852	19	52
		10			13 923	30	57			14 994	29	57			16 065	29	57
	750	4	0.488	0.414	5 967	5	34	0.525	0.446	6 426	5	34	0.563	0.478	6 885	5	34
		6			8 951	11	44			9 639	10	44			10 328	10	44
		8			11 934	19	52			12 852	19	52			13 770	19	52
		10			14 918	30	57			16 065	29	57			17 213	29	58
	800	4	0.520	0.442	6 365	5	33	0.560	0.476	6 854	4	29	0.600	0.510	7 344	4	34
		6			9 547	10	44			10 282	7	37			11 016	10	44
		8			12 730	19	51			13 709	11	43			14 688	18	52
		10			15 912	29	57			17 136	28	54			18 360	28	57
	850	4	0.553	0.470	6 763	4	33	0.595	0.506	7 283	4	34	0.638	0.542	7 803	4	34
		6			10 144	10	43			10 924	10	44			11 705	10	44
		8			13 525	18	51			14 566	18	52			15 606	18	52
		10			16 907	28	57			18 207	28	57			19 508	28	58
	900	4	0.585	0.497	7 160	4	33	0.630	0.536	7 711	4	33	0.675	0.574	8 262	4	34
		6			10 741	10	43			11 567	10	44			12 393	10	44
		8			14 321	18	51			15 422	17	51			16 524	17	52
		10			17 901	28	57			19 278	27	57			20 655	27	58
	1000	4	0.650	0.553	7 956	4	33	0.700	0.595	8 568	4	34	0.750	0.638	9 180	4	34
		6			11 934	10	43			12 852	10	44			13 770	10	45
		8			15 912	18	51			17 136	17	52			18 360	17	52
		10			19 890	28	57			21 420	27	58			22 950	27	58

6.6. technical parameters of mcr WIP/S rectangular dampers

B – nominal width [mm]
H – nominal height [mm]

v – velocity [m/s]
Sk – duct cross-section [m²]
Se – damper active cross-section [m²]

Q – flow [m³/h]
dp – pressure drop [Pa]
L_{WA} – damper noise level [dB]

			height H [mm]																			
			800					850					900					1000				
		v [m/s]	Sk [m²]	Se [m²]	Q [m³/h]	dp [Pa]	L_{WA} [dB]	Sk [m²]	Se [m²]	Q [m³/h]	dp [Pa]	L_{WA} [dB]	Sk [m²]	Se [m2]	Q [m³/h]	dp [Pa]	L_{WA} [dB]	Sk [m²]	Se [m²]	Q [m³/h]	dp [Pa]	L_{WA} [dB]
width B [mm]	200	4	0.160	0.136	1 958	5	29	0.170	0.145	2 081	5	29	0.180	0.153	2 203	5	29	0.200	0.170	2 448	5	29
		6			2 938	11	39			3 121	11	40			3 305	10	39			3 672	10	40
		8			3 917	19	47			4 162	19	47			4 406	19	47			4 896	19	47
		10			4 896	30	53			5 202	30	53			5 508	29	53			6 120	29	53
	250	4	0.200	0.170	2 448	5	30	0.213	0.181	2 601	5	30	0.225	0.191	2 754	5	30	0.250	0.213	3 060	5	30
		6			3 672	11	40			3 902	11	41			4 131	10	40			4 590	10	41
		8			4 896	19	48			5 202	19	48			5 508	19	48			6 120	19	48
		10			6 120	30	54			6 503	30	54			6 885	29	54			7 650	29	54
	300	4	0.240	0.204	2 938	5	31	0.255	0.217	3 121	5	31	0.270	0.230	3 305	5	31	0.300	0.255	3 672	5	31
		6			4 406	11	41			4 682	11	41			4 957	10	41			5 508	10	42
		8			5 875	19	49			6 242	19	49			6 610	19	49			7 344	19	49
		10			7 344	30	54			7 803	30	55			8 262	29	54			9 180	29	55
	350	4	0.280	0.238	3 427	5	31	0.298	0.253	3 641	5	31	0.315	0.268	3 856	4	31	0.350	0.298	4 284	4	31
		6			5 141	10	41			5 462	10	42			5 783	10	41			6 426	10	42
		8			6 854	19	49			7 283	19	49			7 711	18	49			8 568	18	49
		10			8 568	29	55			9 104	29	55			9 639	28	55			10 710	28	55
	400	4	0.320	0.272	3 917	5	31	0.340	0.289	4 162	5	32	0.360	0.306	4 406	4	31	0.400	0.340	4 896	4	32
		6			5 875	10	42			6 242	10	42			6 610	10	42			7 344	10	42
		8			7 834	19	49			8 323	19	50			8 813	18	49			9 792	18	50
		10			9 792	29	55			10 404	29	55			11 016	28	55			12 240	28	56
	450	4	0.360	0.306	4 406	5	32	0.383	0.325	4 682	4	32	0.405	0.344	4 957	4	31	0.450	0.383	5 508	4	32
		6			6 610	10	42			7 023	10	42			7 436	10	42			8 262	10	42
		8			8 813	19	50			9 364	18	50			9 914	17	50			11 016	17	50
		10			11 016	29	56			11 705	28	56			12 393	27	55			13 770	27	56
	500	4	0.400	0.340	4 896	5	32	0.425	0.361	5 202	4	32	0.450	0.383	5 508	4	32	0.500	0.425	6 120	4	32
		6			7 344	10	43			7 803	10	43			8 262	10	42			9 180	10	43
		8			9 792	19	50			10 404	18	50			11 016	17	50			12 240	17	50
		10			12 240	29	56			13 005	28	56			13 770	27	56			15 300	27	56
	550	4	0.440	0.374	5 386	5	33	0.468	0.397	5 722	4	33	0.495	0.421	6 059	4	32	0.550	0.468	6 732	4	33
		6			8 078	10	43			8 583	10	43			9 088	10	43			10 098	10	43
		8			10 771	19	51			11 444	18	51			12 118	17	50			13 464	17	51
		10			13 464	29	57			14 306	28	56			15 147	27	56			16 830	27	57
	600	4	0.480	0.408	5 875	5	33	0.510	0.434	6 242	4	33	0.540	0.459	6 610	4	33	0.600	0.510	7 344	4	33
		6			8 813	10	44			9 364	10	43			9 914	10	43			11 016	10	44
		8			11 750	19	51			12 485	18	51			13 219	17	51			14 688	17	51
		10			14 688	29	57			15 606	28	57			16 524	27	57			18 360	27	57
	650	4	0.520	0.442	6 365	5	33	0.553	0.470	6 763	4	33	0.585	0.497	7 160	4	33	0.650	0.553	7 956	4	34
		6			9 547	10	44			10 144	10	44			10 741	10	44			11 934	10	44
		8			12 730	19	52			13 525	18	51			14 321	17	51			15 912	17	52
		10			15 912	29	57			16 907	28	57			17 901	27	57			19 890	27	57
	700	4	0.560	0.476	6 854	4	33	0.595	0.506	7 283	4	33	0.630	0.536	7 711	4	33	0.700	0.595	8 568	4	33
		6			10 282	10	44			10 924	10	44			11 567	9	43			12 852	9	44
		8			13 709	18	51			14 566	17	51			15 422	17	51			17 136	17	51
		10			17 136	28	57			18 207	27	57			19 278	26	57			21 420	26	57
	750	4	0.600	0.510	7 344	4	34	0.638	0.542	7 803	4	33	0.675	0.574	8 262	4	33	0.750	0.638	9 180	4	34
		6			11 016	10	44			11 705	10	44			12 393	9	44			13 770	9	44
		8			14 688	18	52			15 606	17	51			16 524	17	51			18 360	17	52
		10			18 360	28	57			19 508	27	57			20 655	26	57			22 950	26	57
	800	4	0.640	0.544	7 834	4	34	0.680	0.578	8 323	4	34	0.720	0.612	8 813	4	33	0.800	0.680	9 792	4	34
		6			11 750	10	44			12 485	10	44			13 219	9	44			14 688	9	44
		8			15 667	18	52			16 646	17	52			17 626	17	52			19 584	17	52
		10			19 584	28	58			20 808	27	58			22 032	26	57			24 480	26	58
	850	4	0.680	0.578	8 323	4	34	0.723	0.614	8 843	4	33	0.765	0.650	9 364	4	34	0.850	0.723	10 404	4	34
		6			12 485	10	44			13 265	9	44			14 045	9	44			15 606	9	45
		8			16 646	17	52			17 687	17	52			18 727	17	52			20 808	17	52
		10			20 808	27	58			22 109	26	57			23 409	26	58			26 010	26	58
	900	4	0.720	0.612	8 813	4	34	0.765	0.650	9 364	4	34	0.810	0.689	9 914	4	34	0.900	0.765	11 016	4	34
		6			13 219	10	45			14 045	9	44			14 872	9	45			16 524	9	44
		8			17 626	17	52			18 727	17	52			19 829	17	52			22 032	16	52
		10			22 032	27	58			23 409	26	58			24 786	26	58			27 540	25	58
	1000	4	0.800	0.680	9 792	4	34	0.850	0.723	10 404	4	34	0.900	0.765	11 016	4	33	1.000	0.850	12 240	4	34
		6			14 688	9	44			15 606	9	44			16 524	9	44			18 360	9	44
		8			19 584	17	52			20 808	16	52			22 032	15	51			24 480	15	52
		10			24 480	26	58			26 010	25	58			27 540	24	57			30 600	24	58

The mcr WIP fire damper selection program is available at **www.mercor.com.pl**, in the Designer Zone.

6.7. estimated weights of mcr WIP/S dampers for rectangular ducts [kg]

		width B [mm]									
		200	250	300	400	500	600	700	800	900	1000
height H [mm]	200	10	10	10	10	15	17	18	19	22	25
	250	10	10	11	11	16	18	18	21	24	27
	300	10	11	11	12	17	20	21	23	26	28
	350	11	11	11	16	18	21	23	26	28	30
	400	12	12	14	18	19	21	25	29	30	33
	500	15	16	17	19	20	23	27	32	33	35
	600	17	18	20	21	23	26	30	35	37	39
	700	18	18	21	23	25	28	32	35	38	40
	800	20	21	22	24	29	35	37	41	43	49
	900	22	25	25	28	33	35	39	43	49	52
	1000	23	29	32	33	36	42	43	47	53	60

The table shows the weights of dampers with RST-KW1 trigger control mechanisms or actuators.

6.8. accessories

6.8.1. mcr KRP connection pipe

The mcr KRP connection pipes are used to connect a circular ventilation duct to a rectangular damper. The connection is a „bare end" pipe. The diameter of the pipe is 2 mm smaller than the diameter of the ventilation duct.

Dimensions:

BxH - damper dimensions [mm]

ØD - diameter of the connection duct [mm]

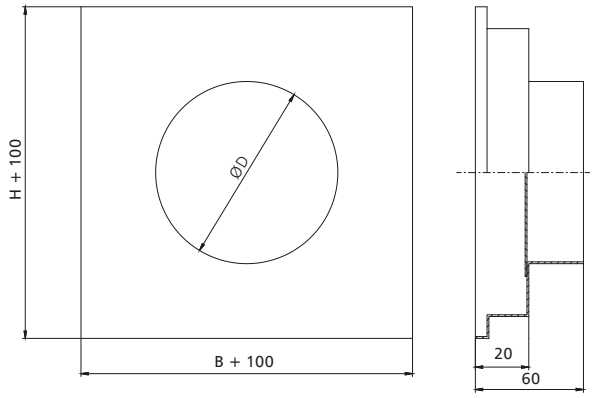

6.9. marking

mcr WIP/S / B x H / 1 / 2 / 3

- additional parameters
- material
- control
- width x height (nominal)
- damper type

1 – control:

– RST-KW1 trigger control mechanism
RST-KW1/S – thermal trigger
RST-KW1/S/WK2 – thermal trigger + limit switch (open/closed blade signal)
RST-KW1/24I - thermal trigger + „pulse" type electromagnetic breaker, U = 24 V DC + limit switch (closed/open partition signalling)
RST-KW1/24P - thermal trigger + „break" type electromagnetic trigger, U = 24 V DC+ limit switch (closed/open partition signalling)
RST-KW1/230I - thermal trigger + „pulse" type electromagnetic breaker, U = 230 V AC + limit switch (closed/open partition signalling)
RST-KW1/230P - thermal trigger + „break" type electromagnetic trigger, U = 230 V AC+ limit switch (closed/open partition signalling)

– Belimo trigger control mechanism
BF24-T – actuator with a return spring, U = 24 V AC/DC
BF230-T – actuator with a return spring, U = 230 V AC
BF24TL-T-ST (with the BKN230-24MP option) – actuator with a return spring, U = 24 V. MP Bus digital control
EXBF24-T – explosion proof actuator with a return spring in the Ex version, U = 24 V AC/DC
EXBF230-T – explosion proof actuator with a return spring in the Ex version, U = 230 V AC
BF24-T-ST (with the BKN230-24 option) – actuator with a return spring, for the SBS Control system
BFL24-T – actuator with a return spring, U = 24 V AC/DC
BFL230-T – actuator with a return spring, U = 230 V AC
BFL24-T-ST (with the BKN230-24 option) – actuator with a return spring. for the SBS Control system
BFN24-T – actuator with a return spring, U = 24 V AC/DC
BFN230-T – actuator with a return spring, U = 230 V AC
BFN24-T-ST (with the BKN230-24 option) – actuator with a return spring. for the SBS Control system

2 – material

[no symbol] – galvanised steel, Zn 275 g/m^2 coating
KN – stainless steel
KK – 1.4404 acid-proof steel

3 – additional parameters

Thermoelectric or thermal triggers
[no symbol] – trigger for 72°C
ZBAE95 – thermoelectric trigger 95°C
ZBAT95 – thermoelectric trigger for 95°C
T93-95 – thermal trigger for 95°C

Axis of rotation of the damper
[no symbol] – horizontal axis of rotation
PP – vertical axis of rotation
PP_D – vertical axis of rotation - mechanism at the bottom of the damper
PP_G – vertical axis of rotation - mechanism at the top of the damper

Manufacture standard (see chapter 14.2 of this Catalogue)
[no symbol] – left damper
KP – right damper

Note: the additional parameters to be entered preceded by the "/" sign

example marking:

mcr WIP/S 400 x 400 BFL24-T

Louvered fire damper EIS60 with a compact 24 V Belimo actuator with limit switches.

Chapter 13 - power supply and control (p. 203) contains:
- **technical specifications and connection diagrams for the trigger control mechanisms supporting the damper.**

Chapter 14 - additional information (p. 210) contains:
- **location of trigger control mechanisms in relation to the damper - production standards,**
- **table for quick selection of dampers, depending on fire separation and its thickness,**
- **installation distances: damper-ceiling, damper-wall, damper-damper.**

mcr WIP/T
mcr WIP/T-G

multi-blade transfer and relief fire dampers

PRODUCT CONFIGURATOR AND CAD MODELS/BIM AT WWW.MERCOR.COM.PL IN THE DESIGNER'S ZONE

BIM CAD

1396-CPR-0097

ATEST HIGIENICZNY

CERTYFIKACJA PRODUKTU

- **$EI_1$60, $EI_2$120, EI120, E120**
- **Technical Approval AT-15-9582/2015, Certificate of Conformity CZ-ITB-2415/W.**
- **Certificate of constancy of performance 1396-CPR-0097.**
- **Dampers qualified under EN 13501-2, EN 13501-3 and tested under EN 1366-2.**
- **Transfer and relief shutter dampers.**

7.1. application

The mcr WIP/T transfer dampers are intended for installation in automatically operated fire ventilation systems. They are installed in fire walls without connecting ventilation ducts and retain their fire resistance during the fire. During normal operation, damper blades are open, what enables the supply of fresh air to escape routes, protecting them from smoke, or to the space, in which air exchange or supply through vertical construction partitions is required.

It is possible to use a closed transfer damper, in which the shutters open to transfer compensation air upon the receipt of an alarm signal from the fire signalling centre.

The mcr WIP/T-G dampers are used as relief dampers, e.g. in gas extinguishing systems. In that case, they are equipped with drives without thermoelectric triggers. Shutter closing and opening is achieved through dedicated control units.

In the version designed for explosion hazard zones (EX version), the dampers can operate in gas explosion hazard zone 1 inside and outside ventilation ducts, and dust explosion hazard zone 21 outside these ducts. The dampers have been certified in compliance with the ATEX directive 94/9/EC and meet the requirements of group II category 2G and -/2D:

II 2G Ex h IIC T6 Gb

II -/2D Ex h IIIC T72° -/Db

Ambient temperature: Ta: -20°... +50°C

7.2. design

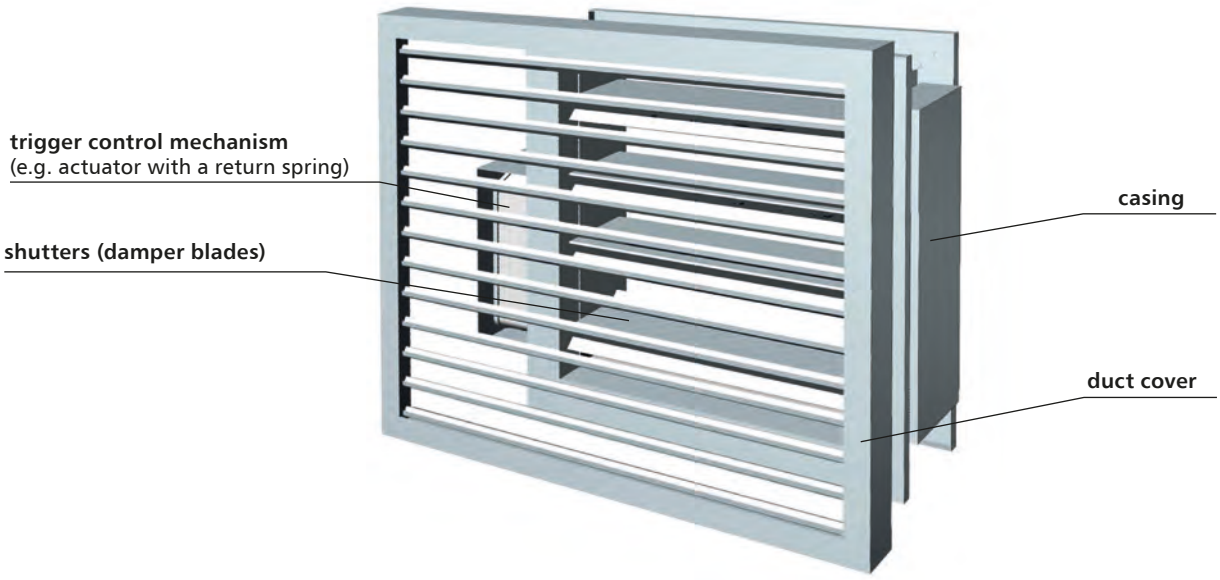

The mcr WIP/T transfer and relief dampers mcr WIP/T-G consist of a casing with a rectangular cross section, a moving multiple damper blades - shutters rotating on their axes and a trigger control mechanism which is tripped remotely or automatically by tripping a thermal trigger (only mcr WIP/T). Damper casing is made of galvanised or stainless steel sheet. Its integral part is a flange of silicate-cement panels. The inner side of the fire damper casing is equipped with an intumescent gasket. The casing total length is 140 mm.

The shutter surface is covered with galvanised or stainless steel sheet. Each louver with the thickness of 15 mm is filled with a plaster panel. The damper blades revolve on their axes, which consist of two steel pins. Transfer dampers must be protected with duct covers.

7.3. versions

7.3.1. **mcr WIP/T** – the transfer fire damper with an axial actuator – damper closing and opening with an actuator

During normal operation, the shutters of the fire damper remain open or closed. In case of fire, the shutters shift or remain in standby.

The mcr WIP/T dampers are equipped with a Belimo trigger control mechanisms **BFL**, **BFN**, **BF**, **BF-TL** and **EXBF** axial actuator with a return valve, powered with 24 V AC/DC or 230 V AC, with thermoelectric trigger 72°C (optionally it is possible to use triggers with the nominal tripping temperature of 95°C). The dampers can also be equipped with actuators without the BE and BLE series return spring. The actuators are equipped with limit switches used to monitor the louver position, and furthermore, the mechanical position indicator is placed on the actuator.

Dampers with Belimo actuators: analogue BFL, BFN, BF, digital BF-TL, EXBF explosion proof actuators close as a result of thermoelectric trigger tripping or power supply cut-off as a result of the actuator return spring action. The dampers open when the power supply voltage is applied to the actuator terminals. Furthermore, dampers with those actuators may be opened manually using a key. The fire dampers with analogue BLE, BE actuators can be opened/closed by supplying voltage.

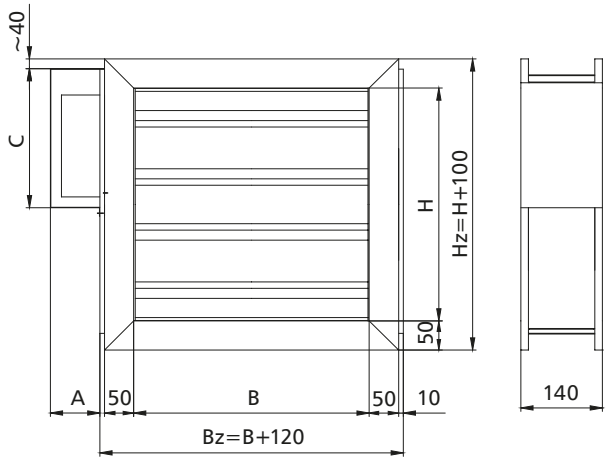

mechanism	A	C
BFN	125	325
BFL	125	275
BF	125	325
BF24TL-ST	125	325
EXBF	175	400
BLE	125	275
BE	125	325

insert symmetrically in relation to the axis of the wall

7.3.2. **WIP/T-G** – the relief fire damper with an actuator with a return spring – damper closing and opening with an actuator

During normal operation, the shutters of the relief damper remain open or closed. In case of fire, the shutters are shifted remotely by dedicated control units.

The mcr WIP/T-G dampers are equipped with a Belimo trigger control mechanisms **BFL**, **BFN**, **BF**, **BLE**, **BE** series axial actuator with a return spring, powered with 24 V AC/DC or 230 V AC without a thermoelectric trigger. BFL, BFN, BF, BLE, BE series actuators are equipped with limit switches used to monitor the blades position. Furthermore, the mechanical position indicator is placed on the actuator.

The mcr WIP/T-G relief dampers are designed e.g. to release the extinguishing medium from the space, in which the gas extinguishing system was used. Dampers have no thermal triggers installed. Damper closing and opening is triggered by a suitable control device, according to the fire protection design prepared for the specific building.

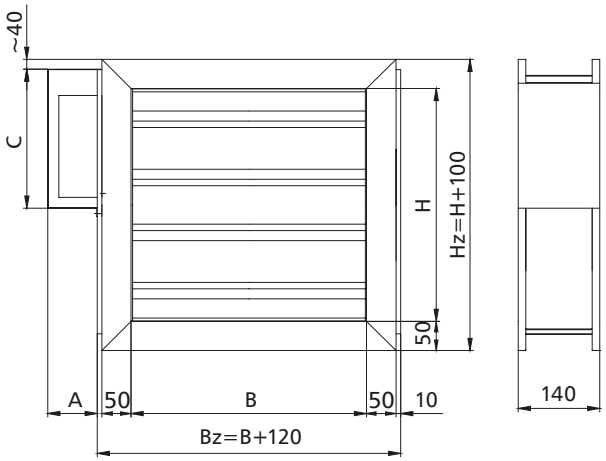

mechanism	A	C
BFN	125	325
BFL	125	275
BF	125	325
BLE	125	275
BE	125	325

insert symmetrically in relation to the axis of the wall

7.4. dimensions

Rectangular dampers:

- nominal width B: from 120 mm to 1000 mm
- nominal height H: from 160 mm to 1000 mm
- the maximum cross-section surface of one damper up to 1 m^2

Apart from the standard dimensions, fire dampers may be manufactured with intermediate dimensions (in 1 mm increments, in the given range). The exception are dampers whose height value falls within the 36-54 ranges, e.g. 136-154, 236-254…

7.5. installation

The mcr WIP/T, mcr WIP/T-G rectangular dampers are $EI_1$60 and $EI_2$120-rated according to Technical Approval if installed in concrete or reinforced concrete partitions with the thickness of at least 110 mm, partitions made of full bricks or concrete blocks with a thickness of at least 110 mm, perforated bricks or cellular concrete blocks with a thickness of at least 110 min.

The mcr WIP/T rectangular dampers are EI120(ve i↔o) / E120(ve i↔o) rated if installed in concrete or reinforced concrete partitions with the thickness of at least 110 mm, partitions made of full bricks or concrete blocks with a thickness of at least 110 mm, perforated bricks or cellular concrete blocks with a thickness of at least 110 min.

7.5.1. preparation of installation openings

The minimum dimensions of the installation opening that allows correct installation of the mcr WIP/T or mcr WIP/T-G damper is:

Bo = (A+Bz+80) mm
Ho = (H+180) mm

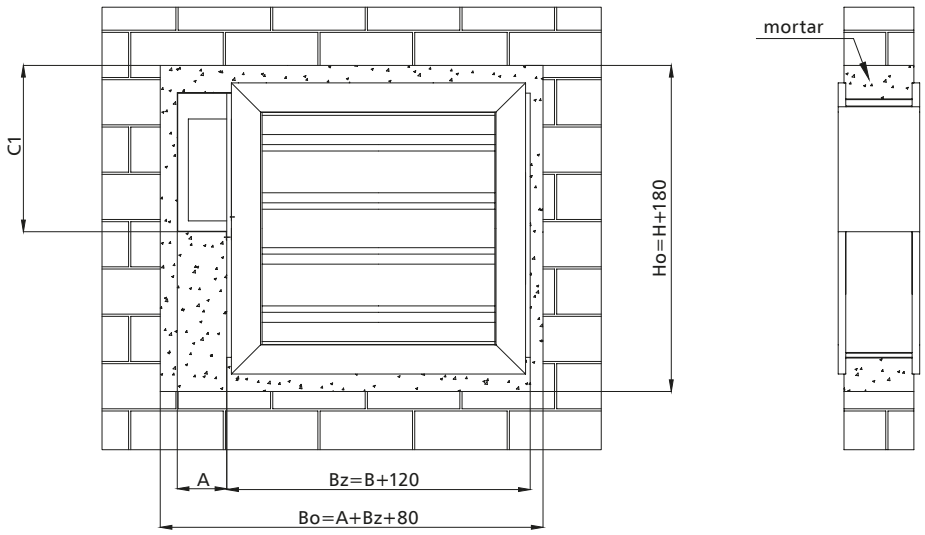

	BF	BFL	BFN	EXBF	BLE	BE
C1 [mm]	385	335	385	460	335	385
A [mm]	125	125	125	175	125	125

7.5.2. sample installation in concrete block or full brick walls

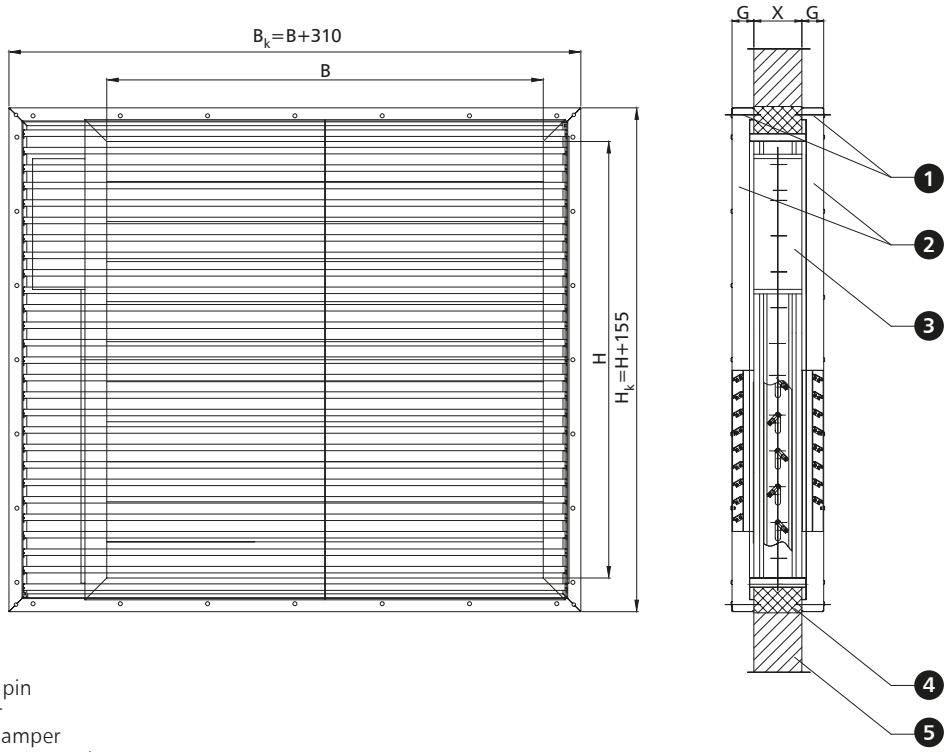

1. mounting pin
2. duct cover
3. mcr WIP damper
4. e.g. cement mortar*
5. e.g. masonry wall

*it is possible to use a different sealing which ensures the required fire resistance

The thickness of the duct cover "G" is 50 mm for wall thickness up to 110 mm. For walls thicker than 110 mm manufacturer allows thickness of cover below 50 mm. For walls wider than dampers thickness, 30 mm duct covers can be used. The duct cover can be made of galvanized steel or stainless steel and painted any RAL color (standard RAL 9010).

Fire damper installation with vertical rotation axis of the louvers

The fire damper can operate with a vertical axis of louver rotation with the top or bottom-mounted mechanism.

Distance between systems and partitions

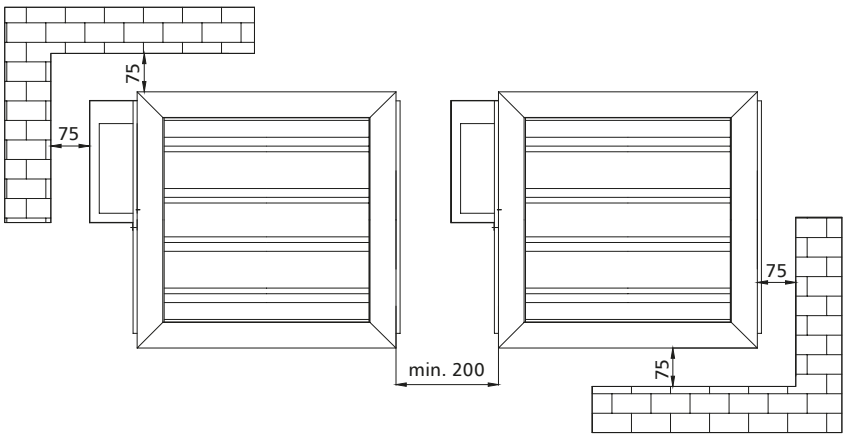

7.5.3. MST system duct covers

The MST system duct covers are used for air supply or extraction. They enable the transfer of air through construction partitions. They come with a fixed steel louvers with a 40 mm span, covering the visibility of the damper.

The casing of the duct cover is fixed to the wall with bolts embedded in the cover casing. After installation, an outer frame is mounted on the cover casing so that the holes and bolts cannot be seen from the outside. Such a solution allows for installing the product even in the most visually-demanding applications. The duct cover are painted in RAL 9010, as standard (available on request in any colour from the RAL range).

dimensions:

- nominal width Bk: from 200 to 1500 mm
- nominal height Hk: from 200 to 1500 mm
- nominal thickness G 30 and 50 mm

Apart from the standard dimensions there is a possibility to produce duct covers with intermediate dimensions.

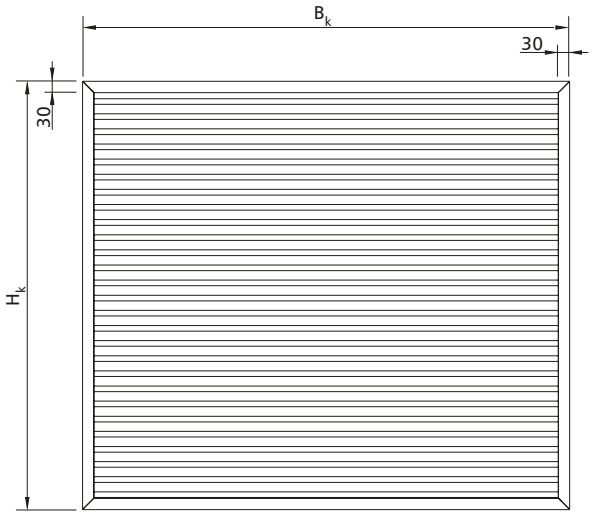

MST-30

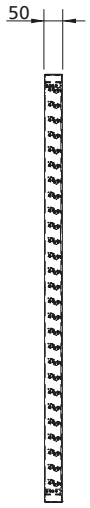

MST-50

7.5.4. technical parameters of MST duct covers

B – nominal width [mm]
H – nominal height [mm]
v – velocity [m/s]
Se – duct cover active cross-section [m²]
Q – flow [m³/h]
dp – pressure drop [Pa]

			height H_k [mm]											
			200			300			400			500		
		v [m/s]	Se [m²]	Q [m³/h]	dp [Pa]	Se [m²]	Q [m³/h]	dp [Pa]	Se [m²]	Q [m³/h]	dp [Pa]	Se [m²]	Q [m³/h]	dp [Pa]
width B_k [mm]	200	4	0.015	210	12	0.028	403	10	0.041	596	9	0.055	789	9
		6		315	27		605	23		894	21		1 184	20
		8		420	49		806	41		1 192	37		1 578	35
		10		526	76		1 008	64		1 490	58		1 973	54
	300	4	0.028	402	10	0.051	734	8	0.074	1 067	7	0.097	1 400	7
		6		603	23		1 102	19		1 601	17		2 100	15
		8		804	41		1 469	33		2 134	29		2 799	27
		10		1 004	64		1 836	52		2 668	46		3 499	42
	400	4	0.041	593	9	0.074	1 066	7	0.107	1 538	6	0.140	2 010	6
		6		890	21		1 598	17		2 307	14		3 015	13
		8		1 187	37		2 131	29		3 076	26		4 020	23
		10		1 483	58		2 664	46		3 845	40		5 026	36
	500	4	0.055	785	9	0.097	1 397	7	0.140	2 009	6	0.182	2 621	5
		6		1 177	20		2 095	15		3 013	13		3 931	12
		8		1 570	35		2 794	27		4 018	23		5 242	21
		10		1 962	55		3 492	42		5 022	36		6 552	33
	600	4	0.068	976	8	0.120	1 728	6	0.172	2 480	5	0.224	3 231	5
		6		1 464	19		2 592	14		3 720	12		4 847	11
		8		1 953	33		3 456	26		4 959	22		6 463	19
		10		2 441	52		4 320	40		6 199	34		8 078	30
	700	4	0.081	1 168	8	0.143	2 059	6	0.205	2 951	5	0.267	3 842	5
		6		1 752	18		3 089	14		4 426	12		5 763	10
		8		2 336	32		4 118	25		5 901	21		7 684	18
		10		2 920	50		5 148	38		7 376	32		9 605	29
	800	4	0.094	1 359	8	0.166	2 390	6	0.238	3 421	5	0.309	4 452	4
		6		2 039	18		3 586	13		5 132	11		6 679	10
		8		2 719	31		4 781	24		6 843	20		8 905	17
		10		3 398	49		5 976	37		8 554	31		11 131	27
	900	4	0.108	1 551	8	0.189	2 722	6	0.270	3 892	5	0.352	5 063	4
		6		2 326	17		4 082	13		5 838	11		7 595	9
		8		3 102	31		5 443	23		7 785	19		10 126	17
		10		3 877	48		6 804	36		9 731	30		12 658	26
	1000	4	0.121	1 742	8	0.212	3 053	6	0.303	4 363	5	0.394	5 674	4
		6		2 614	17		4 579	13		6 545	10		8 510	9
		8		3 485	30		6 106	23		8 726	19		11 347	16
		10		4 356	47		7 632	35		10 908	29		14 184	25
	1100	4	0.134	1 934	7	0.235	3 384	6	0.336	4 834	5	0.436	6 284	4
		6		2 901	17		5 076	12		7 251	10		9 426	9
		8		3 868	30		6 768	22		9 668	18		12 568	16
		10		4 835	47		8 460	35		12 085	28		15 710	25
	1200	4	0.148	2 125	7	0.258	3 715	5	0.368	5 305	4	0.479	6 895	4
		6		3 188	17		5 573	12		7 957	10		10 342	9
		8		4 251	30		7 430	22		10 610	18		13 789	16
		10		5 314	46		9 288	34		13 262	28		17 237	24
	1300	4	0.161	2 317	7	0.281	4 046	5	0.401	5 776	4	0.521	7 505	4
		6		3 475	16		6 070	12		8 664	10		11 258	9
		8		4 634	29		8 093	21		11 552	18		15 011	15
		10		5 792	46		10 116	34		14 440	27		18 763	24
	1400	4	0.174	2 508	7	0.304	4 378	5	0.434	6 247	4	0.564	8 116	4
		6		3 763	16		6 566	12		9 370	10		12 174	8
		8		5 017	29		8 755	21		12 493	17		16 232	15
		10		6 271	45		10 944	33		15 617	27		20 290	23
	1500	4	0.188	2 700	7	0.327	4 709	5	0.467	6 718	4	0.606	8 726	4
		6		4 050	16		7 063	12		10 076	10		13 090	8
		8		5 400	29		9 418	21		13 435	17		17 453	15
		10		6 750	45		11 772	33		16 794	27		21 816	23

7.5.4. technical parameters of MST duct covers

B – nominal width [mm]
H – nominal height [mm]
v – velocity [m/s]
Se – duct cover active cross-section [m²]
Q – flow [m³/h]
dp – pressure drop [Pa]

			height H_k [mm]											
			600			700			800			900		
		v [m/s]	Se [m²]	Q [m³/h]	dp [Pa]	Se [m²]	Q [m³/h]	dp [Pa]	Se [m²]	Q [m³/h]	dp [Pa]	Se [m²]	Q [m³/h]	Se [m²]
width B_k [mm]	200	4	0.068	982	8	0.082	1 175	8	0.095	1 368	8	0.108	1 558	8
		6		1 473	19		1 763	18		2 052	18		2 337	17
		8		1 964	33		2 350	32		2 736	31		3 116	31
		10		2 455	52		2 938	50		3 420	49		3 895	48
	300	4	0.120	1 732	6	0.143	2 065	6	0.167	2 398	6	0.189	2 726	6
		6		2 598	14		3 097	14		3 596	13		4 089	13
		8		3 465	25		4 130	24		4 795	24		5 452	23
		10		4 331	40		5 162	38		5 994	37		6 815	36
	400	4	0.172	2 483	5	0.205	2 955	5	0.238	3 427	5	0.270	3 894	5
		6		3 724	12		4 432	12		5 141	11		5 841	11
		8		4 965	22		5 910	21		6 854	20		7 788	19
		10		6 206	34		7 387	32		8 568	31		9 734	30
	500	4	0.225	3 233	5	0.267	3 845	5	0.310	4 457	4	0.352	5 062	4
		6		4 849	11		5 767	10		6 685	10		7 592	9
		8		6 466	19		7 690	18		8 914	17		10 123	17
		10		8 082	30		9 612	28		11 142	27		12 654	26
	600	4	0.277	3 983	4	0.329	4 735	4	0.381	5 486	4	0.433	6 229	4
		6		5 975	10		7 102	9		8 230	9		9 344	9
		8		7 966	18		9 469	17		10 973	16		12 459	15
		10		9 958	28		11 837	26		13 716	25		15 574	24
	700	4	0.329	4 733	4	0.391	5 625	4	0.453	6 516	4	0.514	7 397	4
		6		7 100	9		8 437	9		9 774	8		11 096	8
		8		9 467	17		11 249	16		13 032	15		14 795	14
		10		11 833	26		14 062	24		16 290	23		18 493	22
	800	4	0.381	5 484	4	0.452	6 515	4	0.524	7 546	3	0.595	8 565	3
		6		8 225	9		9 772	8		11 318	8		12 848	8
		8		10 967	16		13 029	15		15 091	14		17 130	13
		10		13 709	25		16 286	23		18 864	22		21 413	21
	900	4	0.433	6 234	4	0.514	7 404	4	0.596	8 575	3	0.676	9 733	3
		6		9 351	9		11 107	8		12 863	7		14 599	7
		8		12 468	15		14 809	14		17 150	13		19 466	13
		10		15 584	24		18 511	22		21 438	21		24 332	20
	1000	4	0.485	6 984	4	0.576	8 294	3	0.667	9 605	3	0.757	10 901	3
		6		10 476	8		12 442	8		14 407	7		16 351	7
		8		13 968	15		16 589	14		19 210	13		21 802	12
		10		17 460	23		20 736	21		24 012	20		27 252	19
	1100	4	0.537	7 734	4	0.638	9 184	3	0.739	10 634	3	0.838	12 069	3
		6		11 601	8		13 776	7		15 952	7		18 103	7
		8		15 468	14		18 369	13		21 269	12		24 137	12
		10		19 336	22		22 961	21		26 586	19		30 172	18
	1200	4	0.589	8 484	3	0.700	10 074	3	0.810	11 664	3	0.919	13 236	3
		6		12 727	8		15 111	7		17 496	7		19 855	6
		8		16 969	14		20 148	13		23 328	12		26 473	11
		10		21 211	22		25 186	20		29 160	19		33 091	18
	1300	4	0.641	9 235	3	0.761	10 964	3	0.882	12 694	3	1.000	14 404	3
		6		13 852	8		16 446	7		19 040	7		21 606	6
		8		18 469	14		21 928	13		25 387	12		28 809	11
		10		23 087	21		27 410	20		31 734	18		36 011	17
	1400	4	0.693	9 985	3	0.823	11 854	3	0.953	13 723	3	1.081	15 572	3
		6		14 977	8		17 781	7		20 585	6		23 358	6
		8		19 970	13		23 708	12		27 446	11		31 144	11
		10		24 962	21		29 635	19		34 308	18		38 930	17
	1500	4	0.746	10 735	3	0.885	12 744	3	1.025	14 753	3	1.163	16 740	3
		6		16 103	7		19 116	7		22 129	6		25 110	6
		8		21 470	13		25 488	12		29 506	11		33 480	11
		10		26 838	21		31 860	19		36 882	18		41 850	17

7.5.4. technical parameters of MST duct covers

B – nominal width [mm]
H – nominal height [mm]
v – velocity [m/s]
Se – duct cover active cross-section [m²]
Q – flow [m³/h]
dp – pressure drop [Pa]

			height H_k [mm]											
			1000			1100			1200			1300		
		v [m/s]	Se [m²]	Q [m³/h]	dp [Pa]	Se [m²]	Q [m³/h]	dp [Pa]	Se [m²]	Q [m³/h]	dp [Pa]	Se [m²]	Q [m³/h]	dp [Pa]
width B_k [mm]	200	4	0.122	1 751	8	0.135	1 944	7	0.148	2 137	7	0.162	2 330	7
		6		2 627	17		2 916	17		3 205	16		3 495	16
		8		3 502	30		3 888	30		4 274	29		4 660	29
		10		4 378	47		4 860	46		5 342	46		5 825	45
	300	4	0.212	3 059	6	0.236	3 391	5	0.259	3 724	5	0.282	4 056	5
		6		4 588	13		5 087	12		5 586	12		6 085	12
		8		6 117	22		6 782	22		7 448	22		8 113	21
		10		7 646	35		8 478	34		9 310	34		10 141	33
	400	4	0.303	4 366	5	0.336	4 838	5	0.369	5 311	4	0.402	5 783	4
		6		6 549	10		7 258	10		7 966	10		8 675	10
		8		8 732	19		9 677	18		10 621	18		11 566	17
		10		10 915	29		12 096	28		13 277	28		14 458	27
	500	4	0.394	5 674	4	0.437	6 286	4	0.479	6 898	4	0.522	7 510	4
		6		8 510	9		9 428	9		10 346	9		11 264	9
		8		11 347	16		12 571	16		13 795	15		15 019	15
		10		14 184	25		15 714	25		17 244	24		18 774	24
	600	4	0.485	6 981	4	0.537	7 733	4	0.589	8 484	3	0.641	9 236	3
		6		10 472	8		11 599	8		12 727	8		13 854	8
		8		13 962	15		15 466	14		16 969	14		18 472	14
		10		17 453	23		19 332	22		21 211	22		23 090	21
	700	4	0.576	8 289	3	0.638	9 180	3	0.699	10 071	3	0.761	10 963	3
		6		12 433	8		13 770	7		15 107	7		16 444	7
		8		16 577	14		18 360	13		20 143	13		21 925	13
		10		20 722	21		22 950	21		25 178	20		27 407	20
	800	4	0.666	9 596	3	0.738	10 627	3	0.810	11 658	3	0.881	12 689	3
		6		14 394	7		15 941	7		17 487	7		19 034	7
		8		19 192	13		21 254	12		23 316	12		25 379	12
		10		23 990	20		26 568	19		29 146	19		31 723	18
	900	4	0.757	10 904	3	0.839	12 074	3	0.920	13 245	3	1.001	14 416	3
		6		16 356	7		18 112	7		19 868	6		21 624	6
		8		21 807	12		24 149	12		26 490	11		28 832	11
		10		27 259	19		30 186	18		33 113	18		36 040	17
	1000	4	0.848	12 211	3	0.939	13 522	3	1.030	14 832	3	1.121	16 142	3
		6		18 317	7		20 282	6		22 248	6		24 214	6
		8		24 422	12		27 043	11		29 664	11		32 285	11
		10		30 528	18		33 804	18		37 080	17		40 356	17
	1100	4	0.939	13 519	3	1.040	14 969	3	1.140	16 419	3	1.241	17 869	3
		6		20 278	6		22 453	6		24 628	6		26 803	6
		8		27 037	11		29 938	11		32 838	10		35 738	10
		10		33 797	18		37 422	17		41 047	16		44 672	16
	1200	4	1.030	14 826	3	1.140	16 416	3	1.250	18 006	3	1.361	19 596	2
		6		22 239	6		24 624	6		27 009	6		29 393	6
		8		29 652	11		32 832	10		36 012	10		39 191	10
		10		37 066	17		41 040	16		45 014	16		48 989	15
	1300	4	1.120	16 134	3	1.241	17 863	3	1.361	19 593	2	1.481	21 322	2
		6		24 201	6		26 795	6		29 389	6		31 983	5
		8		32 268	11		35 726	10		39 185	10		42 644	10
		10		40 334	17		44 658	16		48 982	15		53 305	15
	1400	4	1.211	17 441	3	1.341	19 310	2	1.471	21 180	2	1.601	23 049	2
		6		26 162	6		28 966	6		31 769	5		34 573	5
		8		34 883	10		38 621	10		42 359	10		46 097	9
		10		43 603	16		48 276	16		52 949	15		57 622	14
	1500	4	1.302	18 749	3	1.442	20 758	2	1.581	22 766	2	1.721	24 775	2
		6		28 123	6		31 136	5		34 150	5		37 163	5
		8		37 498	10		41 515	10		45 533	9		49 550	9
		10		46 872	16		51 894	15		56 916	15		61 938	14

7.5.4. technical parameters of MST duct covers

B – nominal width [mm]
H – nominal height [mm]
v – velocity [m/s]
Se – duct cover active cross-section [m²]
Q – flow [m³/h]
dp – pressure drop [Pa]

			height H_k [mm]					
			1400			1500		
		v [m/s]	Se [m²]	Q [m³/h]	dp [Pa]	Se [m²]	Q [m³/h]	dp [Pa]
width B_k [mm]	200	4	0.175	2 523	7	0.189	2 716	7
		6		3 784	16		4 074	16
		8		5 046	29		5 432	29
		10		6 307	45		6 790	45
	300	4	0.305	4 389	5	0.328	4 722	5
		6		6 584	12		7 083	12
		8		8 778	21		9 444	21
		10		10 973	33		11 804	33
	400	4	0.434	6 255	4	0.467	6 728	4
		6		9 383	10		10 092	10
		8		12 511	17		13 455	17
		10		15 638	27		16 819	27
	500	4	0.564	8 122	4	0.607	8 734	4
		6		12 182	8		13 100	8
		8		16 243	15		17 467	15
		10		20 304	23		21 834	23
	600	4	0.694	9 988	3	0.746	10 740	3
		6		14 982	8		16 109	7
		8		19 976	13		21 479	13
		10		24 970	21		26 849	21
	700	4	0.823	11 854	3	0.885	12 745	3
		6		17 781	7		19 118	7
		8		23 708	12		25 491	12
		10		29 635	19		31 864	19
	800	4	0.953	13 720	3	1.024	14 751	3
		6		20 580	6		22 127	6
		8		27 441	11		29 503	11
		10		34 301	18		36 878	18
	900	4	1.082	15 587	3	1.164	16 757	3
		6		23 380	6		25 136	6
		8		31 173	11		33 515	11
		10		38 966	17		41 893	17
	1000	4	1.212	17 453	3	1.303	18 763	3
		6		26 179	6		28 145	6
		8		34 906	10		37 526	10
		10		43 632	16		46 908	16
	1100	4	1.342	19 319	2	1.442	20 769	2
		6		28 979	6		31 154	5
		8		38 638	10		41 538	10
		10		48 298	15		51 923	15
	1200	4	1.471	21 185	2	1.582	22 775	2
		6		31 778	5		34 163	5
		8		42 371	10		45 550	9
		10		52 963	15		56 938	15
	1300	4	1.601	23 052	2	1.721	24 781	2
		6		34 577	5		37 171	5
		8		46 103	9		49 562	9
		10		57 629	14		61 952	14
	1400	4	1.730	24 918	2	1.860	26 787	2
		6		37 377	5		40 180	5
		8		49 836	9		53 574	9
		10		62 294	14		66 967	14
	1500	4	1.860	26 784	2	2.000	28 793	2
		6		40 176	5		43 189	5
		8		53 568	9		57 586	9
		10		66 960	14		71 982	13

7.6. technical parameters of mcr WIP/T and mcr WIP/T-G rectangular dampers

B – nominal width [mm]
H – nominal height [mm]

v – velocity [m/s]
Sk – duct cross-section [m^2]
Se – damper active cross-section [m^2]

Q – flow [m^3/h]
dp – pressure drop [Pa]
L_{WA} – damper noise level [dB]

			height H [mm]														
			200					250					300				
		v [m/s]	Sk [m^2]	Se [m^2]	Q [m^3/h]	dp [Pa]	L_{WA} [dB]	Sk [m^2]	Se [m^2]	Q [m^3/h]	dp [Pa]	L_{WA} [dB]	Sk [m^2]	Se [m^2]	Q [m^3/h]	dp [Pa]	L_{WA} [dB]
width B [mm]	200	4	0.040	0.034	490	6	26	0.050	0.043	612	6	26	0.06	0.051	734	6	27
		6			734	13	36			918	13	37			1 102	13	37
		8			979	24	44			1 224	23	44			1 469	22	45
		10			1 224	37	49			1 530	36	50			1 836	35	50
	250	4	0.050	0.043	612	6	26	0.063	0.053	765	6	27	0.075	0.064	918	6	28
		6			918	13	37			1 148	13	38			1 377	13	38
		8			1 224	23	44			1 530	23	45			1 836	22	46
		10			1 530	36	50			1 913	36	51			2 295	35	51
	300	4	0.060	0.051	734	6	27	0.075	0.064	918	6	28	0.09	0.077	1 102	6	28
		6			1 102	13	37			1 377	13	38			1 652	13	39
		8			1 469	23	45			1 836	23	46			2 203	22	46
		10			1 836	36	51			2 295	36	52			2 754	35	52
	350	4	0.070	0.060	857	6	27	0.088	0.074	1 071	36	52	0.105	0.089	1 285	5	29
		6			1 285	13	38			1 607	13	39			1 928	12	39
		8			1 714	22	45			2 142	22	46			2 570	22	47
		10			2 142	35	51			2 678	35	52			3 213	34	52
	400	4	0.080	0.068	979	6	28	0.100	0.085	1 224	6	29	0.12	0.102	1 469	5	29
		6			1 469	13	38			1 836	13	39			2 203	12	40
		8			1 958	22	46			2 448	22	47			2 938	22	47
		10			2 448	35	52			3 060	35	53			3 672	34	53
	450	4	0.090	0.077	1 102	6	28	0.113	0.096	1 377	6	29	0.135	0.115	1 652	5	30
		6			1 652	13	39			2 066	13	40			2 479	12	40
		8			2 203	22	46			2 754	22	47			3 305	22	48
		10			2 754	35	52			3 443	35	53			4 131	34	54
	500	4	0.100	0.085	1 224	5	28	0.125	0.106	1 530	5	29	0.15	0.128	1 836	5	30
		6			1 836	12	39			2 295	12	40			2 754	12	40
		8			2 448	22	46			3 060	22	47			3 672	21	48
		10			3 060	34	52			3 825	34	53			4 590	33	54
	550	4	0.110	0.094	1 346	5	29	0.138	0.117	1 683	5	30	0.165	0.140	2 020	5	31
		6			2 020	12	39			2 525	12	40			3 029	12	41
		8			2 693	22	47			3 366	22	48			4 039	22	49
		10			3 366	34	53			4 208	34	54			5 049	34	54
	600	4	0.120	0.102	1 469	5	29	0.150	0.128	1 836	5	30	0.18	0.153	2 203	5	31
		6			2 203	12	40			2 754	12	41			3 305	12	41
		8			2 938	22	47			3 672	22	48			4 406	21	49
		10			3 672	34	53			4 590	34	54			5 508	33	54
	650	4	0.130	0.111	1 591	5	30	0.163	0.138	1 989	5	30	0.195	0.166	2 387	5	31
		6			2 387	12	40			2 984	12	41			3 580	12	41
		8			3 182	22	48			3 978	22	49			4 774	21	49
		10			3 978	34	53			4 973	34	54			5 967	33	55
	700	4	0.140	0.119	1 714	5	30	0.175	0.149	2 142	5	31	0.21	0.179	2 570	5	31
		6			2 570	12	40			3 213	12	41			3 856	12	42
		8			3 427	22	48			4 284	22	49			5 141	21	49
		10			4 284	34	54			5 355	34	55			6 426	33	55
	750	4	0.150	0.128	1 836	5	30	0.188	0.159	2 295	5	31	0.225	0.191	2 754	5	31
		6			2 754	12	40			3 443	12	41			4 131	12	42
		8			3 672	21	48			4 590	21	49			5 508	21	49
		10			4 590	33	54			5 738	33	55			6 885	32	55
	800	4	0.160	0.136	1 958	5	30	0.200	0.170	2 448	5	31	0.24	0.204	2 938	5	31
		6			2 938	12	41			3 672	12	42			4 406	12	42
		8			3 917	21	48			4 896	21	49			5 875	21	49
		10			4 896	33	54			6 120	33	55			7 344	32	55
	850	4	0.170	0.145	2 081	5	30	0.213	0.181	2 601	5	31	0.255	0.217	3 121	5	31
		6			3 121	12	40			3 902	12	41			4 682	11	42
		8			4 162	21	48			5 202	21	49			6 242	20	49
		10			5 202	32	54			6 503	32	55			7 803	31	55
	900	4	0.180	0.153	2 203	5	30	0.225	0.191	2 754	5	31	0.27	0.230	3 305	5	31
		6			3 305	12	41			4 131	12	42			4 957	11	42
		8			4 406	21	48			5 508	21	49			6 610	20	50
		10			5 508	32	54			6 885	32	55			8 262	31	55
	1000	4	0.200	0.170	2 448	5	31	0.250	0.213	3 060	5	32	0.3	0.255	3 672	5	32
		6			3 672	12	41			4 590	12	42			5 508	11	43
		8			4 896	21	49			6 120	21	50			7 344	20	50
		10			6 120	32	54			7 650	32	55			9 180	31	56

7.6. technical parameters of mcr WIP/T and mcr WIP/T-G rectangular dampers

B – nominal width [mm]
H – nominal height [mm]

v – velocity [m/s]
Sk – duct cross-section [m²]
Se – damper active cross-section [m²]

Q – flow [m³/h]
dp – pressure drop [Pa]
L_{WA} – damper noise level [dB]

			height H [mm]														
			350					400					450				
		v [m/s]	Sk [m²]	Se [m²]	Q [m³/h]	dp [Pa]	L_{WA} [dB]	Sk [m²]	Se [m²]	Q [m³/h]	dp [Pa]	L_{WA} [dB]	Sk [m²]	Se [m²]	Q [m³/h]	dp [Pa]	L_{WA} [dB]
width B [mm]	200	4	0.070	0.060	857	6	27	0.080	0.068	979	5	27	0.090	0.077	1 102	5	28
		6			1 285	13	38			1 469	12	38			1 652	12	38
		8			1 714	22	45			1 958	22	45			2 203	22	46
		10			2 142	35	51			2 448	34	51			2 754	34	52
	250	4	0.088	0.074	1 071	6	28	0.100	0.085	1 224	5	28	0.113	0.096	1 377	5	29
		6			1 607	13	39			1 836	12	39			2 066	12	39
		8			2 142	22	46			2 448	22	46			2 754	22	47
		10			2 678	35	52			3 060	34	52			3 443	34	53
	300	4	0.105	0.089	1 285	6	29	0.120	0.102	1 469	5	29	0.135	0.115	1 652	5	30
		6			1 928	13	40			2 203	12	40			2 479	12	40
		8			2 570	22	47			2 938	22	47			3 305	22	48
		10			3 213	35	53			3 672	34	53			4 131	34	54
	350	4	0.123	0.104	1 499	5	29	0.140	0.119	1 714	5	29	0.158	0.134	1 928	5	30
		6			2 249	12	40			2 570	12	40			2 892	12	41
		8			2 999	22	47			3 427	21	48			3 856	21	48
		10			3 749	34	53			4 284	33	53			4 820	33	54
	400	4	0.140	0.119	1 714	5	30	0.160	0.136	1 958	5	30	0.180	0.153	2 203	5	31
		6			2 570	12	40			2 938	12	41			3 305	12	41
		8			3 427	22	48			3 917	21	48			4 406	21	49
		10			4 284	34	54			4 896	33	54			5 508	33	54
	450	4	0.158	0.134	1 928	5	30	0.180	0.153	2 203	5	31	0.203	0.172	2 479	5	31
		6			2 892	12	41			3 305	12	41			3 718	12	42
		8			3 856	22	48			4 406	21	49			4 957	21	49
		10			4 820	34	54			5 508	33	54			6 197	33	55
	500	4	0.175	0.149	2 142	5	30	0.200	0.170	2 448	5	31	0.225	0.191	2 754	5	32
		6			3 213	12	41			3 672	12	42			4 131	12	42
		8			4 284	21	48			4 896	21	49			5 508	21	50
		10			5 355	33	54			6 120	33	55			6 885	33	55
	550	4	0.193	0.164	2 570	5	31	0.220	0.187	2 693	5	31	0.248	0.210	3 029	5	32
		6			3 856	12	42			4 039	12	42			4 544	12	43
		8			5 141	22	49			5 386	21	49			6 059	21	50
		10			6 426	34	55			6 732	33	55			7 574	33	56
	600	4	0.210	0.179	2 570	5	31	0.240	0.204	2 938	4	28	0.270	0.230	3 305	5	32
		6			3 856	12	42			4 406	8	37			4 957	12	42
		8			5 141	21	49			5 875	14	44			6 610	21	50
		10			6 426	33	55			7 344	32	55			8 262	32	56
	650	4	0.228	0.193	2 785	5	32	0.260	0.221	3 182	5	32	0.293	0.249	3 580	5	32
		6			4 177	12	42			4 774	12	42			5 370	12	43
		8			5 569	21	50			6 365	21	50			7 160	21	50
		10			6 962	33	55			7 956	32	56			8 951	32	56
	700	4	0.245	0.208	2 999	5	32	0.28	0.238	3 427	5	32	0.315	0.268	3 856	5	33
		6			4 498	12	42			5 141	12	43			5 783	12	43
		8			5 998	21	50			6 854	21	50			7 711	21	51
		10			7 497	33	56			8 568	32	56			9 639	32	56
	750	4	0.263	0.223	3 213	5	32	0.3	0.255	3 672	5	32	0.338	0.287	4 131	5	33
		6			4 820	12	42			5 508	12	43			6 197	12	43
		8			6 426	21	50			7 344	21	50			8 262	21	51
		10			8 033	32	56			9 180	32	56			10 328	32	57
	800	4	0.280	0.238	3 427	5	32	0.32	0.272	3 917	5	33	0.360	0.306	4 406	5	32
		6			5 141	12	43			5 875	11	43			6 610	11	42
		8			6 854	21	50			7 834	20	50			8 813	20	50
		10			8 568	32	56			9 792	31	56			11 016	31	56
	850	4	0.298	0.253	3 641	5	32	0.34	0.289	4 162	5	32	0.383	0.325	4 682	5	31
		6			5 462	11	42			6 242	11	43			7 023	11	42
		8			7 283	20	50			8 323	19	50			9 364	19	49
		10			9 104	31	56			10 404	30	56			11 705	30	55
	900	4	0.315	0.268	3 856	5	32	0.360	0.306	4 406	6	35	0.405	0.344	4 957	5	31
		6			5 783	11	43			6 610	12	44			7 436	11	42
		8			7 711	20	50			8 813	26	54			9 914	19	49
		10			9 639	31	56			11 016	30	56			12 393	30	55
	1000	4	0.350	0.298	4 284	5	33	0.400	0.340	4 896	5	33	0.450	0.383	5 508	5	31
		6			6 426	11	43			7 344	11	43			8 262	11	42
		8			8 568	20	51			9 792	19	51			11 016	19	49
		10			10 710	31	56			12 240	30	57			13 770	30	55

7.6. technical parameters of mcr WIP/T and mcr WIP/T-G rectangular dampers

B – nominal width [mm]
H – nominal height [mm]

v – velocity [m/s]
Sk – duct cross-section [m²]
Se – damper active cross-section [m²]

Q – flow [m³/h]
dp – pressure drop [Pa]
L_{WA} – damper noise level [dB]

			height H [mm]														
			500					550					600				
		v [m/s]	Sk [m²]	Se [m²]	Q [m³/h]	dp [Pa]	L_{WA} [dB]	Sk [m²]	Se [m²]	Q [m³/h]	dp [Pa]	L_{WA} [dB]	Sk [m²]	Se [m²]	Q [m³/h]	dp [Pa]	L_{WA} [dB]
width B [mm]	200	4	0.100	0.085	1 224	5	28	0.110	0.094	1 346	5	28	0.120	0.102	1 469	5	28
		6			1 836	12	39			2 020	12	39			2 203	12	39
		8			2 448	21	46			2 693	21	46			2 938	21	46
		10			3 060	33	52			3 366	33	52			3 672	32	52
	250	4	0.125	0.106	1 530	5	29	0.138	0.117	1 683	5	29	0.150	0.128	1 836	5	29
		6			2 295	12	40			2 525	12	40			2 754	12	40
		8			3 060	21	47			3 366	21	47			3 672	21	47
		10			3 825	33	53			4 208	33	53			4 590	32	53
	300	4	0.150	0.128	1 836	5	30	0.165	0.140	2 020	5	30	0.180	0.153	2 203	5	30
		6			2 754	12	40			3 029	12	41			3 305	12	41
		8			3 672	21	48			4 039	21	48			4 406	21	48
		10			4 590	33	54			5 049	33	54			5 508	32	54
	350	4	0.175	0.149	2 142	5	30	0.193	0.164	2 356	5	30	0.210	0.179	2 570	5	30
		6			3 213	12	41			3 534	12	41			3 856	11	41
		8			4 284	21	48			4 712	21	49			5 141	20	48
		10			5 355	32	54			5 891	32	54			6 426	31	54
	400	4	0.200	0.170	2 448	5	31	0.220	0.187	2 693	5	31	0.240	0.204	2 938	5	31
		6			3 672	12	41			4 039	12	42			4 406	11	42
		8			4 896	21	49			5 386	21	49			5 875	20	49
		10			6 120	32	54			6 732	32	55			7 344	31	55
	450	4	0.225	0.191	2 754	5	31	0.248	0.210	3 029	5	32	0.270	0.230	3 305	5	31
		6			4 131	12	42			4 544	12	42			4 957	11	42
		8			5 508	21	49			6 059	21	50			6 610	20	50
		10			6 885	32	55			7 574	32	55			8 262	31	55
	500	4	0.250	0.213	3 060	5	31	0.275	0.234	3 366	5	32	0.300	0.255	3 672	5	32
		6			4 590	11	42			5 049	12	43			5 508	11	43
		8			6 120	22	51			6 732	21	50			7 344	20	50
		10			7 650	32	55			8 415	32	56			9 180	31	56
	550	4	0.275	0.234	3 672	5	32	0.303	0.257	4 039	5	32	0.330	0.281	4 406	5	32
		6			5 508	12	43			6 059	12	43			6 610	11	43
		8			7 344	21	50			8 078	21	50			8 813	20	50
		10			9 180	32	56			10 098	32	56			11 016	31	56
	600	4	0.300	0.255	3 672	5	32	0.330	0.281	4 039	5	32	0.360	0.306	4 406	5	32
		6			5 508	11	43			6 059	11	43			6 610	11	43
		8			7 344	20	50			8 078	20	50			8 813	19	50
		10			9 180	31	56			10 098	31	56			11 016	30	56
	650	4	0.325	0.276	3 978	5	33	0.358	0.304	4 376	5	33	0.390	0.332	4 774	5	33
		6			5 967	12	43			6 564	11	43			7 160	11	43
		8			7 956	21	51			8 752	20	51			9 547	19	51
		10			9 945	31	56			10 940	31	57			11 934	30	57
	700	4	0.350	0.298	4 284	5	33	0.385	0.327	4 712	5	33	0.420	0.357	5 141	5	33
		6			6 426	11	43			7 069	11	44			7 711	11	44
		8			8 568	20	51			9 425	20	51			10 282	19	51
		10			10 710	31	56			11 781	31	57			12 852	30	57
	750	4	0.375	0.319	4 590	5	33	0.413	0.351	5 049	5	33	0.450	0.383	5 508	5	33
		6			6 885	11	43			7 574	11	44			8 262	11	44
		8			9 180	20	51			10 098	20	51			11 016	19	51
		10			11 475	31	57			12 623	31	57			13 770	30	57
	800	4	0.400	0.340	4 896	5	32	0.440	0.374	5 386	5	33	0.480	0.408	5 875	5	33
		6			7 344	11	43			8 078	11	44			8 813	10	44
		8			9 792	19	51			10 771	19	51			11 750	19	51
		10			12 240	30	56			13 464	30	57			14 688	29	57
	850	4	0.425	0.361	5 202	5	32	0.468	0.397	5 722	5	33	0.510	0.434	6 242	4	33
		6			7 803	10	43			8 583	10	44			9 364	10	43
		8			10 404	19	50			11 444	19	51			12 485	18	51
		10			13 005	29	56			14 306	29	57			15 606	28	57
	900	4	0.450	0.383	5 508	5	32	0.495	0.421	6 059	5	33	0.540	0.459	6 610	4	33
		6			8 262	10	43			9 088	10	44			9 914	10	41
		8			11 016	19	50			12 118	19	51			13 219	18	49
		10			13 770	29	56			15 147	29	57			16 524	28	54
	1000	4	0.500	0.425	6 120	5	32	0.550	0.468	6 059	5	34	0.600	0.510	7 344	4	34
		6			9 180	10	43			9 088	10	44			11 016	10	44
		8			12 240	19	50			12 118	19	52			14 688	18	52
		10			15 300	29	56			15 147	29	58			18 360	28	57

7.6. technical parameters of mcr WIP/T and mcr WIP/T-G rectangular dampers

B – nominal width [mm]
H – nominal height [mm]

v – velocity [m/s]
Sk – duct cross-section [m²]
Se – damper active cross-section [m²]

Q – flow [m³/h]
dp – pressure drop [Pa]
L_{WA} – damper noise level [dB]

			height H [mm]														
			650					700					750				
		v [m/s]	Sk [m²]	Se [m²]	Q [m³/h]	dp [Pa]	L_{WA} [dB]	Sk [m²]	Se [m²]	Q [m³/h]	dp [Pa]	L_{WA} [dB]	Sk [m²]	Se [m²]	Q [m³/h]	dp [Pa]	L_{WA} [dB]
width B [mm]	200	4	0.130	0.111	1 591	5	29	0.140	0.119	1 714	5	29	0.150	0.128	1 836	5	29
		6			2 387	12	39			2 570	11	39			2 754	11	40
		8			3 182	21	47			3 427	20	47			3 672	20	47
		10			3 978	32	53			4 284	31	52			4 590	31	53
	250	4	0.163	0.138	1 989	5	30	0.175	0.149	2 142	5	30	0.188	0.159	2 295	5	30
		6			2 984	12	40			3 213	11	40			3 443	11	40
		8			3 978	21	48			4 284	20	48			4 590	20	48
		10			4 973	32	54			5 355	31	53			5 738	31	54
	300	4	0.195	0.166	2 387	5	30	0.210	0.179	2 570	5	30	0.225	0.191	2 754	5	31
		6			3 580	12	41			3 856	11	41			4 131	11	41
		8			4 774	21	49			5 141	20	48			5 508	20	49
		10			5 967	32	54			6 426	31	54			6 885	31	55
	350	4	0.228	0.193	2 785	5	31	0.245	0.208	2 999	5	31	0.263	0.223	3 213	5	31
		6			4 177	11	41			4 498	11	41			4 820	11	42
		8			5 569	20	49			5 998	19	49			6 426	19	49
		10			6 962	31	55			7 497	30	54			8 033	30	55
	400	4	0.260	0.221	3 182	5	31	0.280	0.238	3 427	5	31	0.300	0.255	3 672	5	32
		6			4 774	11	42			5 141	11	42			5 508	11	42
		8			6 365	20	49			6 854	19	49			7 344	19	50
		10			7 956	31	55			8 568	30	55			9 180	30	55
	450	4	0.293	0.249	3 580	5	32	0.315	0.268	3 856	5	32	0.338	0.287	4 131	5	32
		6			5 370	11	42			5 783	11	42			6 197	11	43
		8			7 160	20	50			7 711	19	50			8 262	19	50
		10			8 951	31	56			9 639	30	56			10 328	30	56
	500	4	0.325	0.276	3 978	5	32	0.350	0.298	4 284	5	32	0.375	0.319	4 590	5	32
		6			5 967	11	43			6 426	11	43			6 885	11	43
		8			7 956	20	50			8 568	19	50			9 180	19	51
		10			9 945	31	56			10 710	30	56			11 475	30	56
	550	4	0.358	0.304	4 774	5	33	0.385	0.327	4 712	5	33	0.413	0.351	5 049	5	33
		6			7 160	11	43			7 069	11	43			7 574	11	43
		8			9 547	20	51			9 425	19	51			10 098	19	51
		10			11 934	31	57			11 781	30	56			12 623	30	57
	600	4	0.390	0.332	4 774	5	33	0.420	0.357	5 141	5	33	0.450	0.383	5 508	5	33
		6			7 160	11	44			7 711	11	44			8 262	11	44
		8			9 547	20	51			10 282	19	51			11 016	19	51
		10			11 934	31	57			12 852	30	57			13 770	30	57
	650	4	0.423	0.359	5 171	5	33	0.455	0.387	5 569	5	33	0.488	0.414	5 967	5	33
		6			7 757	11	44			8 354	10	43			8 951	10	44
		8			10 343	19	51			11 138	19	51			11 934	19	51
		10			12 929	30	57			13 923	29	57			14 918	29	57
	700	4	0.455	0.387	5 569	5	33	0.490	0.417	5 998	5	33	0.525	0.446	6 426	5	34
		6			8 354	11	44			8 996	10	44			9 639	10	44
		8			11 138	19	51			11 995	19	51			12 852	19	52
		10			13 923	30	57			14 994	29	57			16 065	29	57
	750	4	0.488	0.414	5 967	5	34	0.525	0.446	6 426	5	34	0.563	0.478	6 885	5	34
		6			8 951	11	44			9 639	10	44			10 328	10	44
		8			11 934	19	52			12 852	19	52			13 770	19	52
		10			14 918	30	57			16 065	29	57			17 213	29	58
	800	4	0.520	0.442	6 365	5	33	0.560	0.476	6 854	4	29	0.600	0.510	7 344	4	34
		6			9 547	10	44			10 282	7	37			11 016	10	44
		8			12 730	19	51			13 709	11	43			14 688	18	52
		10			15 912	29	57			17 136	28	54			18 360	28	57
	850	4	0.553	0.470	6 763	4	33	0.595	0.506	7 283	4	34	0.638	0.542	7 803	4	34
		6			10 144	10	43			10 924	10	44			11 705	10	44
		8			13 525	18	51			14 566	18	52			15 606	18	52
		10			16 907	28	57			18 207	28	57			19 508	28	58
	900	4	0.585	0.497	7 160	4	33	0.630	0.536	7 711	4	33	0.675	0.574	8 262	4	34
		6			10 741	10	43			11 567	10	44			12 393	10	44
		8			14 321	18	51			15 422	17	51			16 524	17	52
		10			17 901	28	57			19 278	27	57			20 655	27	58
	1000	4	0.650	0.553	7 956	4	33	0.700	0.595	8 568	4	34	0.750	0.638	9 180	4	34
		6			11 934	10	43			12 852	10	44			13 770	10	45
		8			15 912	18	51			17 136	17	52			18 360	17	52
		10			19 890	28	57			21 420	27	58			22 950	27	58

7.6. technical parameters of mcr WIP/T and mcr WIP/T-G rectangular dampers

B – nominal width [mm]
H – nominal height [mm]

v – velocity [m/s]
Sk – duct cross-section [m²]
Se – damper active cross-section [m²]

Q – flow [m³/h]
dp – pressure drop [Pa]
L_{WA} – damper noise level [dB]

			height H [mm]																			
			800					850					900					1000				
		v [m/s]	Sk [m²]	Se [m²]	Q [m³/h]	dp [Pa]	L_{WA} [dB]	Sk [m²]	Se [m²]	Q [m³/h]	dp [Pa]	L_{WA} [dB]	Sk [m²]	Se [m2]	Q [m³/h]	dp [Pa]	L_{WA} [dB]	Sk [m²]	Se [m²]	Q [m³/h]	dp [Pa]	L_{WA} [dB]
width B [mm]	200	4	0.160	0.136	1 958	5	29	0.170	0.145	2 081	5	29	0.180	0.153	2 203	5	29	0.200	0.170	2 448	5	29
		6			2 938	11	39			3 121	11	40			3 305	10	39			3 672	10	40
		8			3 917	19	47			4 162	19	47			4 406	19	47			4 896	19	47
		10			4 896	30	53			5 202	30	53			5 508	29	53			6 120	29	53
	250	4	0.200	0.170	2 448	5	30	0.213	0.181	2 601	5	30	0.225	0.191	2 754	5	30	0.250	0.213	3 060	5	30
		6			3 672	11	40			3 902	11	41			4 131	10	40			4 590	10	41
		8			4 896	19	48			5 202	19	48			5 508	19	48			6 120	19	48
		10			6 120	30	54			6 503	30	54			6 885	29	54			7 650	29	54
	300	4	0.240	0.204	2 938	5	31	0.255	0.217	3 121	5	31	0.270	0.230	3 305	5	31	0.300	0.255	3 672	5	31
		6			4 406	11	41			4 682	11	41			4 957	10	41			5 508	10	42
		8			5 875	19	49			6 242	19	49			6 610	19	49			7 344	19	49
		10			7 344	30	54			7 803	30	55			8 262	29	54			9 180	29	55
	350	4	0.280	0.238	3 427	5	31	0.298	0.253	3 641	5	31	0.315	0.268	3 856	4	31	0.350	0.298	4 284	4	31
		6			5 141	10	41			5 462	10	42			5 783	10	41			6 426	10	42
		8			6 854	19	49			7 283	19	49			7 711	18	49			8 568	18	49
		10			8 568	29	55			9 104	29	55			9 639	28	55			10 710	28	55
	400	4	0.320	0.272	3 917	5	31	0.340	0.289	4 162	5	32	0.360	0.306	4 406	4	31	0.400	0.340	4 896	4	32
		6			5 875	10	42			6 242	10	42			6 610	10	42			7 344	10	42
		8			7 834	19	49			8 323	19	50			8 813	18	49			9 792	18	50
		10			9 792	29	55			10 404	29	55			11 016	28	55			12 240	28	56
	450	4	0.360	0.306	4 406	5	32	0.383	0.325	4 682	4	32	0.405	0.344	4 957	4	31	0.450	0.383	5 508	4	32
		6			6 610	10	42			7 023	10	42			7 436	10	42			8 262	10	42
		8			8 813	19	50			9 364	18	50			9 914	17	50			11 016	17	50
		10			11 016	29	56			11 705	28	56			12 393	27	55			13 770	27	56
	500	4	0.400	0.340	4 896	5	32	0.425	0.361	5 202	4	32	0.450	0.383	5 508	4	32	0.500	0.425	6 120	4	32
		6			7 344	10	43			7 803	10	43			8 262	10	42			9 180	10	43
		8			9 792	19	50			10 404	18	50			11 016	17	50			12 240	17	50
		10			12 240	29	56			13 005	28	56			13 770	27	56			15 300	27	56
	550	4	0.440	0.374	5 386	5	33	0.468	0.397	5 722	4	33	0.495	0.421	6 059	4	32	0.550	0.468	6 732	4	33
		6			8 078	10	43			8 583	10	43			9 088	10	43			10 098	10	43
		8			10 771	19	51			11 444	18	51			12 118	17	50			13 464	17	51
		10			13 464	29	57			14 306	28	56			15 147	27	56			16 830	27	57
	600	4	0.480	0.408	5 875	5	33	0.510	0.434	6 242	4	33	0.540	0.459	6 610	4	33	0.600	0.510	7 344	4	33
		6			8 813	10	44			9 364	10	43			9 914	10	43			11 016	10	44
		8			11 750	19	51			12 485	18	51			13 219	17	51			14 688	17	51
		10			14 688	29	57			15 606	28	57			16 524	27	57			18 360	27	57
	650	4	0.520	0.442	6 365	5	33	0.553	0.470	6 763	4	33	0.585	0.497	7 160	4	33	0.650	0.553	7 956	4	34
		6			9 547	10	44			10 144	10	44			10 741	10	44			11 934	10	44
		8			12 730	19	52			13 525	18	51			14 321	17	51			15 912	17	52
		10			15 912	29	57			16 907	28	57			17 901	27	57			19 890	27	57
	700	4	0.560	0.476	6 854	4	33	0.595	0.506	7 283	4	33	0.630	0.536	7 711	4	33	0.700	0.595	8 568	4	33
		6			10 282	10	44			10 924	10	44			11 567	9	43			12 852	9	44
		8			13 709	18	51			14 566	17	51			15 422	17	51			17 136	17	51
		10			17 136	28	57			18 207	27	57			19 278	26	57			21 420	26	57
	750	4	0.600	0.510	7 344	4	34	0.638	0.542	7 803	4	33	0.675	0.574	8 262	4	33	0.750	0.638	9 180	4	34
		6			11 016	10	44			11 705	10	44			12 393	9	44			13 770	9	44
		8			14 688	18	52			15 606	17	51			16 524	17	51			18 360	17	52
		10			18 360	28	57			19 508	27	57			20 655	26	57			22 950	26	57
	800	4	0.640	0.544	7 834	4	34	0.680	0.578	8 323	4	34	0.720	0.612	8 813	4	33	0.800	0.680	9 792	4	34
		6			11 750	10	44			12 485	10	44			13 219	9	44			14 688	9	44
		8			15 667	18	52			16 646	17	52			17 626	17	52			19 584	17	52
		10			19 584	28	58			20 808	27	58			22 032	26	57			24 480	26	58
	850	4	0.680	0.578	8 323	4	34	0.723	0.614	8 843	4	33	0.765	0.650	9 364	4	34	0.850	0.723	10 404	4	34
		6			12 485	10	44			13 265	9	44			14 045	9	44			15 606	9	45
		8			16 646	17	52			17 687	17	52			18 727	17	52			20 808	17	52
		10			20 808	27	58			22 109	26	57			23 409	26	58			26 010	26	58
	900	4	0.720	0.612	8 813	4	34	0.765	0.650	9 364	4	34	0.810	0.689	9 914	4	34	0.900	0.765	11 016	4	34
		6			13 219	10	45			14 045	9	44			14 872	9	45			16 524	9	44
		8			17 626	17	52			18 727	17	52			19 829	17	52			22 032	16	52
		10			22 032	27	58			23 409	26	58			24 786	26	58			27 540	25	58
	1000	4	0.800	0.680	9 792	4	34	0.850	0.723	10 404	4	34	0.900	0.765	11 016	4	33	1.000	0.850	12 240	4	34
		6			14 688	9	44			15 606	9	44			16 524	9	44			18 360	9	44
		8			19 584	17	52			20 808	16	52			22 032	15	51			24 480	15	52
		10			24 480	26	58			26 010	25	58			27 540	24	57			30 600	24	58

The mcr WIP fire damper selection program is available at **www.mercor.com.pl**, in the Designer Zone.

7.7. estimated weights of mcr WIP/T, mcr WIP/T-G dampers [kg]

height H [mm]	width B [mm]									
	200	250	300	400	500	600	700	800	900	1000
200	10	10	10	10	15	17	18	19	22	25
250	10	10	11	11	16	18	18	21	24	27
300	10	11	11	12	17	20	21	23	26	28
350	11	11	11	16	18	21	23	26	28	30
400	12	12	14	18	19	21	25	29	30	33
500	15	16	17	19	20	23	27	32	33	35
600	17	18	20	21	23	26	30	35	37	39
700	18	18	21	23	25	28	32	35	38	40
800	20	21	22	24	29	35	37	41	43	49
900	22	25	25	28	33	35	39	43	49	52
1000	23	29	32	33	36	42	43	47	53	60

7.8. accessories

7.8.1. mcr KRP connection pipe

The mcr KRP connection pipes are used to connect a circular ventilation duct to a rectangular damper. The connection is a „bare end" pipe. The diameter of the pipe is 2 mm smaller than the diameter of the ventilation duct.

Dimensions:

BxH - damper dimensions [mm]

ØD - diameter of the connection duct [mm]

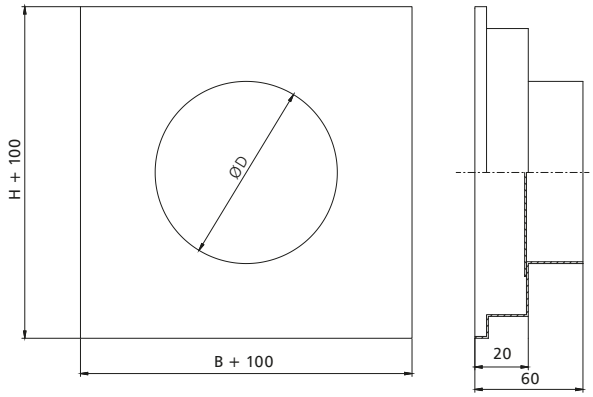

7.9. marking

mcr WIP/T / B x H / 1 / 2 / 3 / 4

- additional parameters
- duct cover
- material
- control
- width x height (nominal)
- damper type

1 – control:

– Belimo trigger control mechanism
BF24-T – actuator with a return spring, U = 24 V AC/DC
BF230-T – actuator with a return spring, U = 230 V AC
BF24TL-T-ST (with the BKN230-24MP option) – actuator with a return spring, U = 24 V, MP Bus digital control
EXBF24-T – explosion proof actuator with a return spring in the Ex version, U = 24 V AC/DC
EXBF230-T – explosion proof actuator with a return spring in the Ex version, U = 230 V AC
BF24-T-ST (with the BKN230-24 option) – actuator with a return spring, for the SBS Control system
BFL24-T – actuator with a return spring, U = 24 V AC/DC
BFL230-T – actuator with a return spring, U = 230 V AC
BFL24-T-ST (with the BKN230-24 option) – actuator with a return spring, for the SBS Control system
BFN24-T – actuator with a return spring, U = 24 V AC/DC
BFN230-T – actuator with a return spring, U = 230 V AC
BFN24-T-ST (with the BKN230-24 option) – actuator with a return spring, for the SBS Control system
BE24 – actuator without a return spring, U = 24 V AC/DC
BLE24 – actuator without a return spring, U = 24 V AC/DC
BE230 – actuator without a return spring, U = 230 V AC/DC
BLE230 – actuator without a return spring, U = 230 V AC/DC

2 – material:

[no symbol] – galvanised steel, Zn 275 g/m^2 coating
KN – stainless steel
KK – 1.4404 acid-proof steel

3 – duct cover:

MSTx1 – 1 side duct cover
MSTx2 – 2 sides duct cover

4 – additional parameters

Thermoelectric or thermal triggers
[no symbol] – trigger for 72°C
ZBAE95 – thermoelectric trigger 95°C
ZBAT95 – thermoelectric trigger for 95°C
T93-95 – thermal trigger for 95°C

Axis of rotation of the damper
[no symbol] – horizontal axis of rotation
PP – vertical axis of rotation
PP_D – vertical axis of rotation - mechanism at the bottom of the damper
PP_G – vertical axis of rotation - mechanism at the top of the damper

Manufacture standard (see chapter 14.2 of this Catalogue)
[no symbol] – left damper
KO – inverse damper

Note: the additional parameters to be entered preceded by the "/" sign

example marking:

mcr WIP/T 400 x 400 BFL24-T

EI120 multi-blade transfer damper with a 24 V compact Belimo actuator with limit switches.

mcr WIP/T-G / B x H / 1 / 2 / 3 / 4

- 4 – additional parameters
- 3 – duct cover
- 2 – material
- 1 – control
- B x H – width x height (nominal)
- mcr WIP/T-G – damper type

1 – control:

– Belimo trigger control mechanism
BF24 – actuator with a return spring, U = 24V AC/DC
BF230 – actuator with a return spring, U = 230 V AC
BFL24 – actuator with a return spring, U = 24 V AC/DC
BFL230 – actuator with a return spring, U = 230 V AC
BFN24 – actuator with a return spring, U = 24 V AC/DC
BFN230 – actuator with a return spring, U = 230 V AC

2 – material:

[no symbol] – galvanised steel, Zn 275 g/m^2 coating
KN – stainless steel
KK – 1.4404 acid-proof steel

3 – duct cover:

MSTx1 – 1 side duct cover
MSTx2 – 2 sides duct cover

4 - additional parameters

Axis of damper rotation
[no symbol] – horizontal axis of rotation
PP – vertical axis of rotation
PP_D – vertical axis of rotation - mechanism at the bottom of the damper
PP_G – vertical axis of rotation - mechanism at the top of the damper

Manufacture standard (see chapter 14.2 of this Catalogue)
[no symbol] – left damper
KP – right damper

Note: the additional parameters to be entered preceded by the "/" sign

example marking:

mcr WIP/T-G 400 x 400 BFL24

EI120 multi-blade relief damper with a 24 V compact Belimo actuator with limit switches.

Chapter 13 - power supply and control (p. 203) contains:
- technical specifications and connection diagrams for the trigger control mechanisms supporting the damper.

Chapter 14 - additional information (p. 210) contains:
- location of trigger control mechanisms in relation to the damper - production standards,
- table for quick selection of dampers, depending on fire separation and its thickness,
- installation distances: damper-ceiling, damper-wall, damper-damper.

mcr WIP/V
mcr WIP/V-M

multi-blade smoke exhaust fire dampers for multi-zone fire ventilation systems

PRODUCT CONFIGURATOR AND CAD MODELS/BIM AT WWW.MERCOR.COM.PL IN THE DESIGNER'S ZONE

BIM CAD

1396-CPR-0117

ATEST HIGIENICZNY

- EI120
- **Certificate of constancy of performance 1396-CPR-0117.**
- **Dampers certified for compliance with EN 12101-8.**
- **Dampers qualified under EN 13501-4 and tested under EN 1366-10.**
- **Narrow louvered fire dampers for fire ventilation systems.**

8.1. application

The mcr WIP/V, mcr WIP/V-M multi-blade cut-off dampers are intended for installation in automatically operated fire ventilation systems. The mcr WIP/V dampers are used in fire ventilation systems, while dampers marked mcr WIP/V-M are used in mixed, fire and comfort ventilation systems. They support both single and multiple fire zones in building. The devices prevent fire, smoke and fire gases propagation to the adjacent areas. During normal operation, the fire damper is in open or closed position depending on its function. In the fire-covered area, the fire damper is open, whereas it remains closed in the other areas. The mcr WIP/V, mcr WIP/V-M fire dampers due to their design are intended for use in systems, where the components such as a silencer, bend or supply and extraction grille are installed downstream of the fire damper.

8.2. design

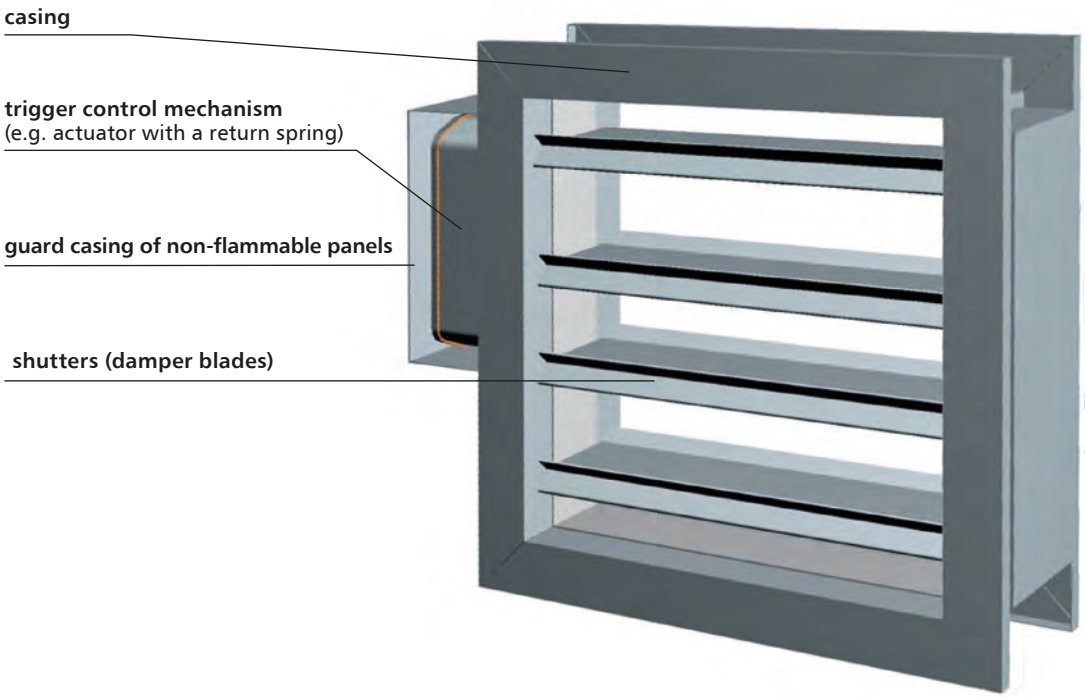

mcr WIP/V, mcr WIP/V-M fire dampers consist of a rectangular casing, movable multiple blades rotating around their axis and a remote trigger control mechanism. Damper casing is made of galvanised or stainless steel sheet. Its integral part is a flange of silicate-cement panels. An intumescent seal and the ventilation seals are installed on the inside to ensure air tightness. The damper casing total length is 140 mm.

The louver surface (blades) is covered with galvanised or stainless steel sheet. Each louver with the thickness of 15 mm is filled with a plaster panel. The damper blades revolve on their axes, which consist of two steel pins.

The square and rectangular dampers are made with 50 mm flanges that enable the correct installation of dampers in ventilation ducts. In a circular duct, the damper is made as square with a circular connection.

8.3. versions

8.3.1. mcr WIP/V, mcr WIP/V-M – smoke exhaust fire damper for multi-zone fire ventilation systems with an actuator – damper closing and opening with an actuator

During normal operation, the fire dampers are opened or closed. In case of fire, the fire damper louvers are opened in the fire-covered area and closed in the other areas - the fire damper is released remotely by feeding the supply voltage to the trigger control mechanism.

mcr WIP/V, mcr WIP/V-M fire dampers are equipped with a Belimo trigger control mechanisms **BLE**, **BE** axial actuator without the return spring (24 V AC/DC or 230 V AC). The BLE, BE-series actuators are equipped with limit switches used to monitor the damper blade position. Furthermore, the mechanical position indicator is placed on the actuator.

Fire dampers with Belimo BLE, BE actuators can be opened/closed by supplying voltage to the actuator terminals. Furthermore, dampers with those actuators may be opened/closed manually using a key.

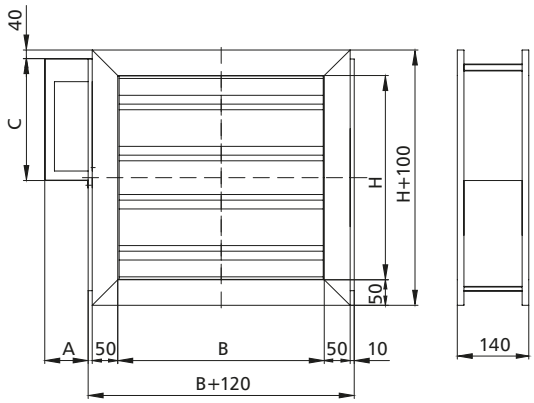

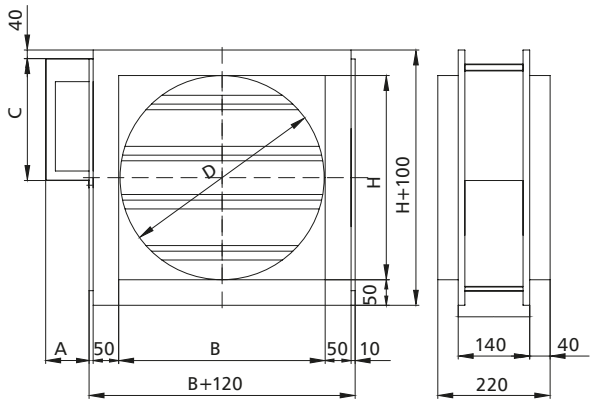

insert symmetrically in relation to the axis of the wall

mechanism	A	C
BLE	125	275
BE	125	325

8.4. dimensions

Rectangular dampers:

- nominal width B: from 120 mm to 1000 mm
- nominal height H: from 160 mm to 1000 mm
- the maximum cross-section surface of one damper up to 1 m^2

Apart from the standard dimensions, fire dampers may be manufactured with intermediate dimensions (in 1 mm increments, in the given range). The exception are dampers whose height value falls within the 36-54 ranges, e.g. 136-154, 236-254...

Square fire dampers may also be fitted with round connectors for the spigot connection to the round ducts.

8.5. installation

The mcr WIP/V and mcr WIP/V-M rectangular dampers are EI120(v_{ew} i↔o)1000C_{10000}AAmulti-rated if installed in concrete partitions with a min. thickness of 110 mm, partitions made of full bricks or cellular blocks with a thickness of at least 115 mm.

8.5.1. preparation of installation openings

e minimum dimensions of the installation opening that permits correct installation of the mcr WIP/V, mcr WIP/V-M damper are:

Bo = (A+Bz+80) mm
Ho = (H+180) mm

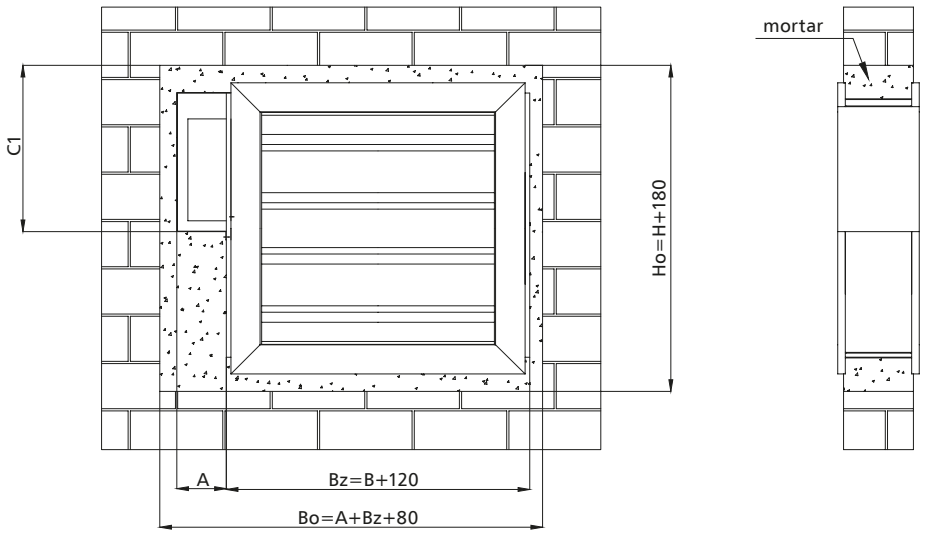

	BE	BLE
C1 [mm]	385	335
A [mm]	125	125

8.5.2. sample installation in concrete or masonry walls

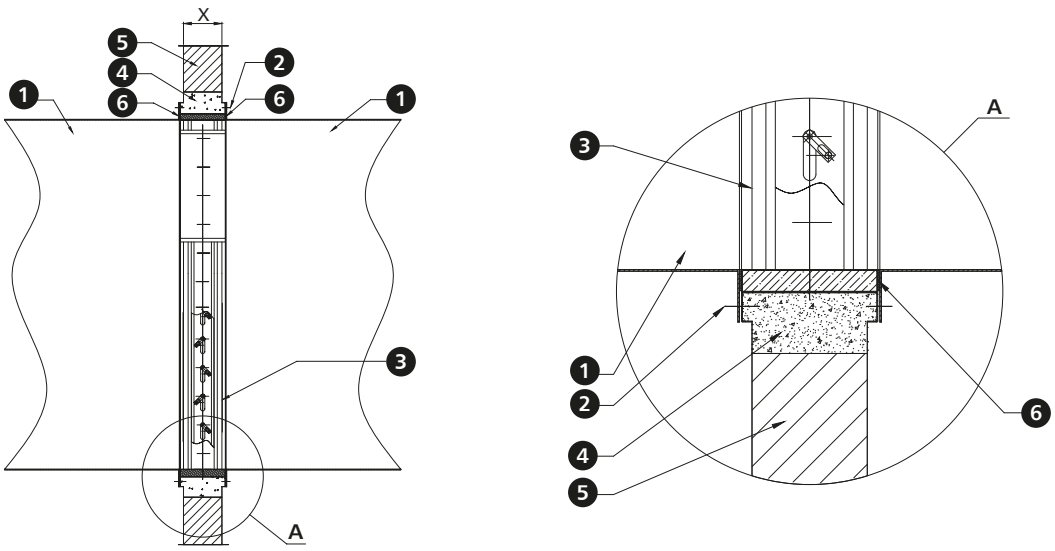

1. smoke ventilation duct
2. ST4.2x16 sheet metal screw
3. mcr WIP damper
4. sealing - e.g. cement masonry mortar*
5. masonry wall
6. heat resistant gasket

X. wall thickness

*it is possible to use a different sealing which ensures the required fire resistance

8.5.3. sample installation in concrete block or full brick walls

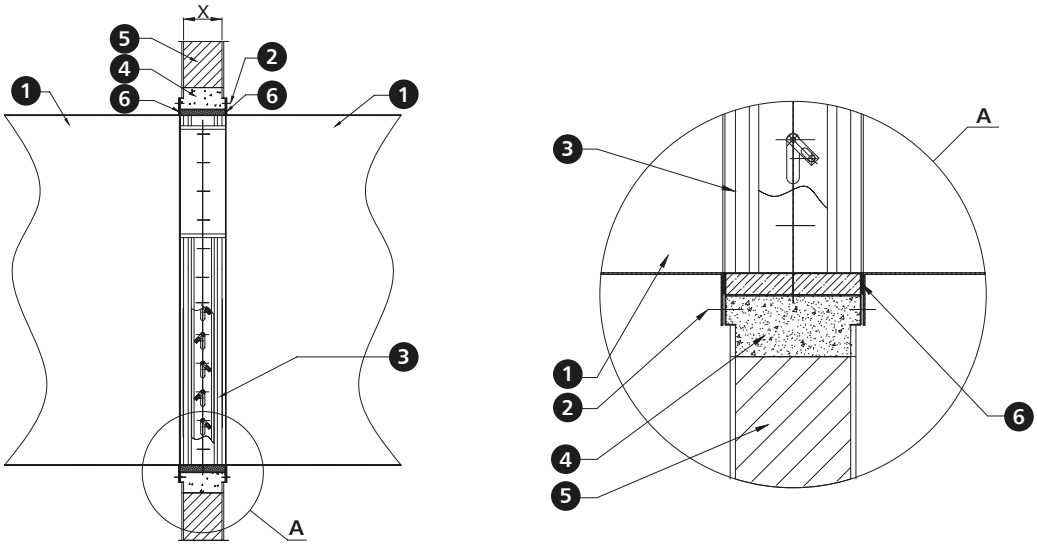

1. smoke ventilation duct
2. sheet metal screw ST4.2 2x16
3. mcr WIP damper
4. sealing - cement masonry mortar*
5. wall of concrete blocks or full bricks
6. heat resistant gasket
X. wall thickness

*it is possible to use a different sealing which ensures the required fire resistance

8.5.4. sample installation in ceiling

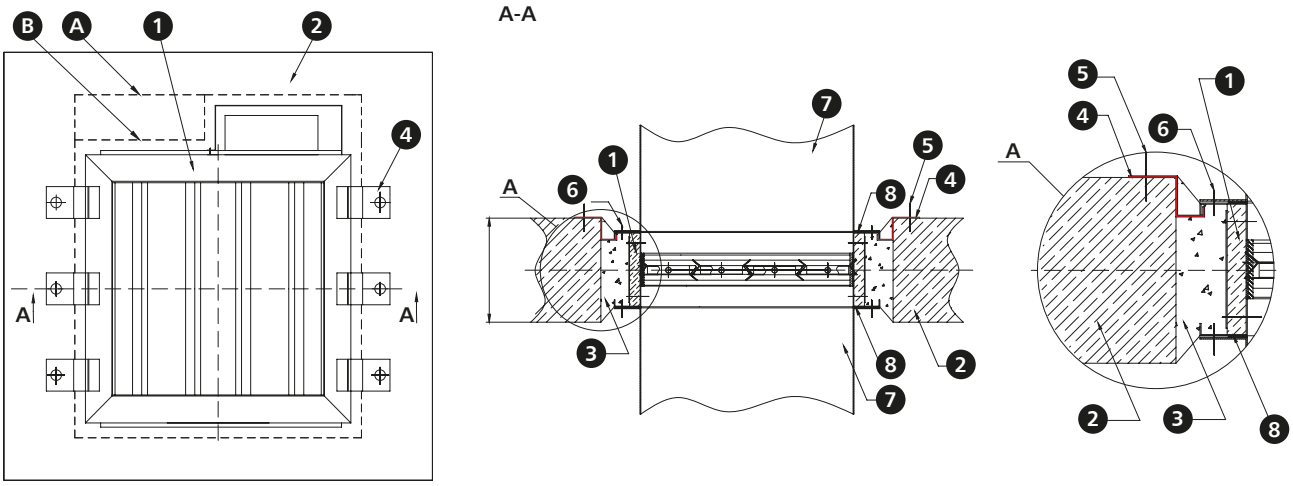

1. mcr WIP damper
2. ceiling
3. e.g. cement mortar*
4. mounting bracket
5.steel expansion anchor with M6 metal screw
6. sheet metal screw ST4.2 2x16
7. ventilation duct
8. heat resistant gasket
A./B. construction opening

*it is possible to use a different sealing which ensures the required fire resistance

8.5.5. sample installation outside the fire partition

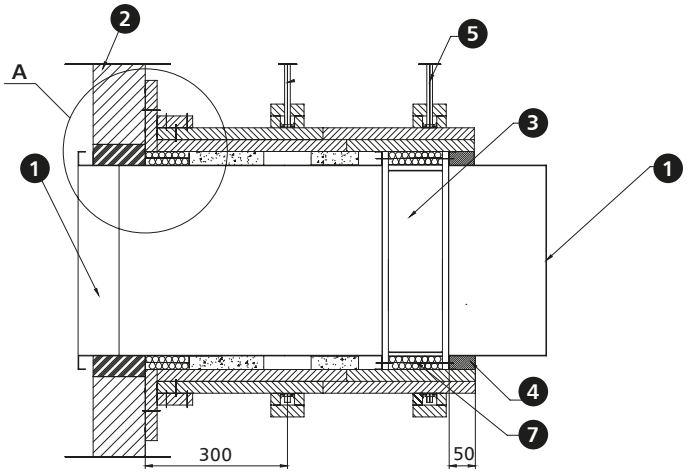

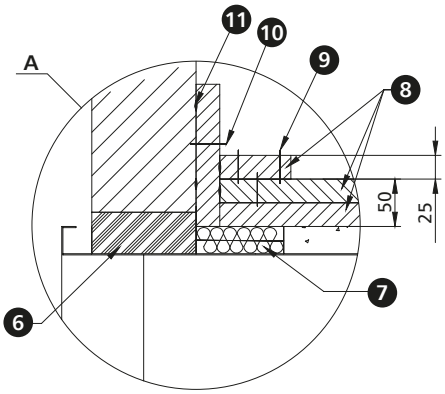

1. ventilation duct
2. partition wall
3. mcr WIP damper
4. gypsum infill
5. duct suspension
6. sealing (cement or cement-lime masonry mortar)*
7. mineral wool with the density of at least 80 kg/m^3, A1 class
8. fire protection material ensuring EI120 fire rating or higher
9. screws 3.5 x 50 at ~150 mm centres
10. steel expansion anchor Ø8 x 80 mm
11. board joints sealed with Conlit Glue

*it is possible to use a different sealing which ensures the required fire resistance

8.5.6. sample module installation

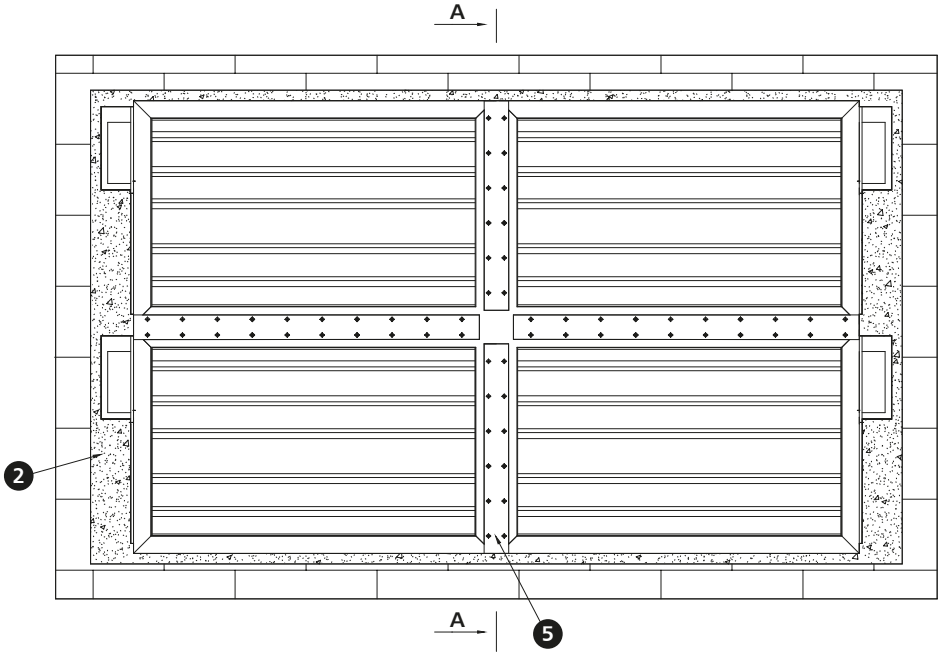

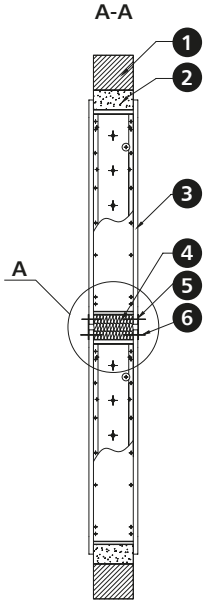

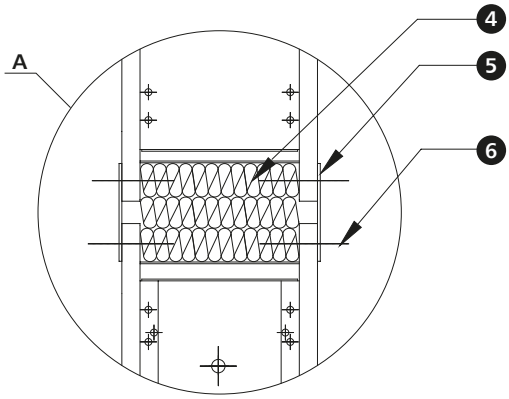

1. e.g. masonry wall
2. e.g. cement mortar*
3. mcr WIP damper module
4. mineral wool with the density of at least 80 kg/m^3, A1 class
5. installation flat bar with the width of 70 mm
6. ST8x16 screw

*it is possible to use a different sealing which ensures the required fire resistance

Fire damper installation with vertical rotation axis of the louvers

The fire damper can operate with a vertical axis of louver rotation with the top or bottom-mounted mechanism.

Distance between systems and partitions

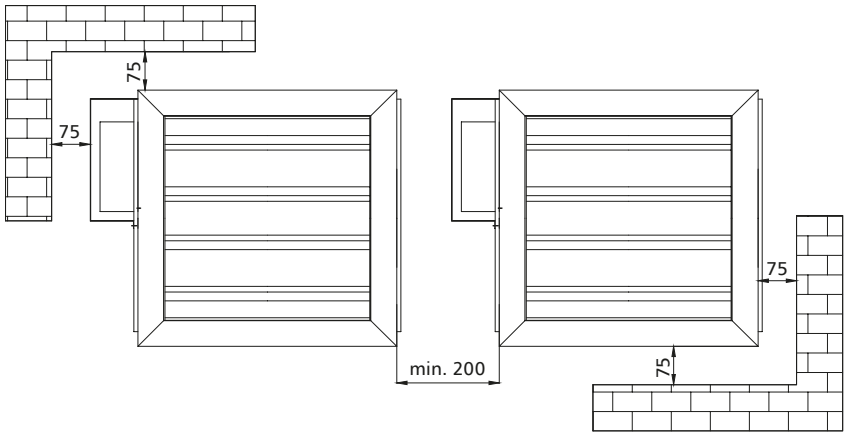

Example applications - installation with a duct cover

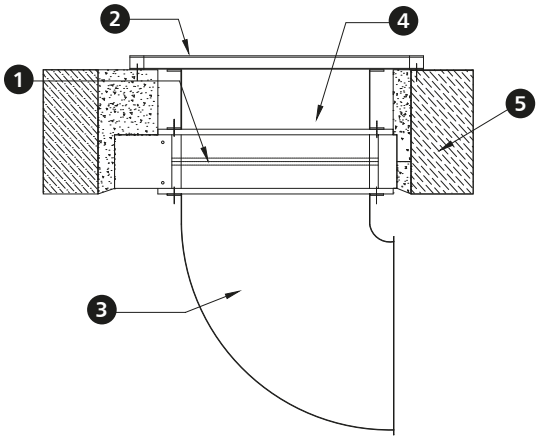

1. mcr WIP damper
2. duct cover
3. ventilation duct
4. duct - ventilation straight connection piece
5. wall, ceiling

If a mcr WIP/V, mcr WIP/V-M damper is used, thanks to the shutters (no single-blade partition) it is possible to use the space in front of and behind the damper for such system elements as a duct cover or a rectangular silencer or to route a duct along the wall using a duct bend or reduction.

8.6. technical parameters of mcr WIP/V, mcr WIP/V-M rectangular dampers

B – nominal width [mm]
H – nominal height [mm]

v – velocity [m/s]
Sk – duct cross-section [m²]
Se – damper active cross-section [m²]

Q – flow [m³/h]
dp – pressure drop [Pa]
L_{WA} – damper noise level [dB]

			height H [mm]														
			200					250					300				
		v [m/s]	Sk [m²]	Se [m²]	Q [m³/h]	dp [Pa]	L_{WA} [dB]	Sk [m²]	Se [m²]	Q [m³/h]	dp [Pa]	L_{WA} [dB]	Sk [m²]	Se [m²]	Q [m³/h]	dp [Pa]	L_{WA} [dB]
width B [mm]	200	4	0.040	0.034	490	6	26	0.050	0.043	612	6	26	0.06	0.051	734	6	27
		6			734	13	36			918	13	37			1 102	13	37
		8			979	24	44			1 224	23	44			1 469	22	45
		10			1 224	37	49			1 530	36	50			1 836	35	50
	250	4	0.050	0.043	612	6	26	0.063	0.053	765	6	27	0.075	0.064	918	6	28
		6			918	13	37			1 148	13	38			1 377	13	38
		8			1 224	23	44			1 530	23	45			1 836	22	46
		10			1 530	36	50			1 913	36	51			2 295	35	51
	300	4	0.060	0.051	734	6	27	0.075	0.064	918	6	28	0.09	0.077	1 102	6	28
		6			1 102	13	37			1 377	13	38			1 652	13	39
		8			1 469	23	45			1 836	23	46			2 203	22	46
		10			1 836	36	51			2 295	36	52			2 754	35	52
	350	4	0.070	0.060	857	6	27	0.088	0.074	1 071	36	52	0.105	0.089	1 285	5	29
		6			1 285	13	38			1 607	13	39			1 928	12	39
		8			1 714	22	45			2 142	22	46			2 570	22	47
		10			2 142	35	51			2 678	35	52			3 213	34	52
	400	4	0.080	0.068	979	6	28	0.100	0.085	1 224	6	29	0.12	0.102	1 469	5	29
		6			1 469	13	38			1 836	13	39			2 203	12	40
		8			1 958	22	46			2 448	22	47			2 938	22	47
		10			2 448	35	52			3 060	35	53			3 672	34	53
	450	4	0.090	0.077	1 102	6	28	0.113	0.096	1 377	6	29	0.135	0.115	1 652	5	30
		6			1 652	13	39			2 066	13	40			2 479	12	40
		8			2 203	22	46			2 754	22	47			3 305	22	48
		10			2 754	35	52			3 443	35	53			4 131	34	54
	500	4	0.100	0.085	1 224	5	28	0.125	0.106	1 530	5	29	0.15	0.128	1 836	5	30
		6			1 836	12	39			2 295	12	40			2 754	12	40
		8			2 448	22	46			3 060	22	47			3 672	21	48
		10			3 060	34	52			3 825	34	53			4 590	33	54
	550	4	0.110	0.094	1 346	5	29	0.138	0.117	1 683	5	30	0.165	0.140	2 020	5	31
		6			2 020	12	39			2 525	12	40			3 029	12	41
		8			2 693	22	47			3 366	22	48			4 039	22	49
		10			3 366	34	53			4 208	34	54			5 049	34	54
	600	4	0.120	0.102	1 469	5	29	0.150	0.128	1 836	5	30	0.18	0.153	2 203	5	31
		6			2 203	12	40			2 754	12	41			3 305	12	41
		8			2 938	22	47			3 672	22	48			4 406	21	49
		10			3 672	34	53			4 590	34	54			5 508	33	54
	650	4	0.130	0.111	1 591	5	30	0.163	0.138	1 989	5	30	0.195	0.166	2 387	5	31
		6			2 387	12	40			2 984	12	41			3 580	12	41
		8			3 182	22	48			3 978	22	49			4 774	21	49
		10			3 978	34	53			4 973	34	54			5 967	33	55
	700	4	0.140	0.119	1 714	5	30	0.175	0.149	2 142	5	31	0.21	0.179	2 570	5	31
		6			2 570	12	40			3 213	12	41			3 856	12	42
		8			3 427	22	48			4 284	22	49			5 141	21	49
		10			4 284	34	54			5 355	34	55			6 426	33	55
	750	4	0.150	0.128	1 836	5	30	0.188	0.159	2 295	5	31	0.225	0.191	2 754	5	31
		6			2 754	12	40			3 443	12	41			4 131	12	42
		8			3 672	21	48			4 590	21	49			5 508	21	49
		10			4 590	33	54			5 738	33	55			6 885	32	55
	800	4	0.160	0.136	1 958	5	30	0.200	0.170	2 448	5	31	0.24	0.204	2 938	5	31
		6			2 938	12	41			3 672	12	42			4 406	12	42
		8			3 917	21	48			4 896	21	49			5 875	21	49
		10			4 896	33	54			6 120	33	55			7 344	32	55
	850	4	0.170	0.145	2 081	5	30	0.213	0.181	2 601	5	31	0.255	0.217	3 121	5	31
		6			3 121	12	40			3 902	12	41			4 682	11	42
		8			4 162	21	48			5 202	21	49			6 242	20	49
		10			5 202	32	54			6 503	32	55			7 803	31	55
	900	4	0.180	0.153	2 203	5	30	0.225	0.191	2 754	5	31	0.27	0.230	3 305	5	31
		6			3 305	12	41			4 131	12	42			4 957	11	42
		8			4 406	21	48			5 508	21	49			6 610	20	50
		10			5 508	32	54			6 885	32	55			8 262	31	55
	1000	4	0.200	0.170	2 448	5	31	0.250	0.213	3 060	5	32	0.3	0.255	3 672	5	32
		6			3 672	12	41			4 590	12	42			5 508	11	43
		8			4 896	21	49			6 120	21	50			7 344	20	50
		10			6 120	32	54			7 650	32	55			9 180	31	56

8.6. technical parameters of mcr WIP/V, mcr WIP/V-M rectangular dampers

B – nominal width [mm]
H – nominal height [mm]

v – velocity [m/s]
Sk – duct cross-section [m²]
Se – damper active cross-section [m²]

Q – flow [m³/h]
dp – pressure drop [Pa]
L_{WA} – damper noise level [dB]

			height H [mm]														
			350					400					450				
		v [m/s]	Sk [m²]	Se [m²]	Q [m³/h]	dp [Pa]	L_{WA} [dB]	Sk [m²]	Se [m²]	Q [m³/h]	dp [Pa]	L_{WA} [dB]	Sk [m²]	Se [m²]	Q [m³/h]	dp [Pa]	L_{WA} [dB]
width B [mm]	200	4	0.070	0.060	857	6	27	0.080	0.068	979	5	27	0.090	0.077	1 102	5	28
		6			1 285	13	38			1 469	12	38			1 652	12	38
		8			1 714	22	45			1 958	22	45			2 203	22	46
		10			2 142	35	51			2 448	34	51			2 754	34	52
	250	4	0.088	0.074	1 071	6	28	0.100	0.085	1 224	5	28	0.113	0.096	1 377	5	29
		6			1 607	13	39			1 836	12	39			2 066	12	39
		8			2 142	22	46			2 448	22	46			2 754	22	47
		10			2 678	35	52			3 060	34	52			3 443	34	53
	300	4	0.105	0.089	1 285	6	29	0.120	0.102	1 469	5	29	0.135	0.115	1 652	5	30
		6			1 928	13	40			2 203	12	40			2 479	12	40
		8			2 570	22	47			2 938	22	47			3 305	22	48
		10			3 213	35	53			3 672	34	53			4 131	34	54
	350	4	0.123	0.104	1 499	5	29	0.140	0.119	1 714	5	29	0.158	0.134	1 928	5	30
		6			2 249	12	40			2 570	12	40			2 892	12	41
		8			2 999	22	47			3 427	21	48			3 856	21	48
		10			3 749	34	53			4 284	33	53			4 820	33	54
	400	4	0.140	0.119	1 714	5	30	0.160	0.136	1 958	5	30	0.180	0.153	2 203	5	31
		6			2 570	12	40			2 938	12	41			3 305	12	41
		8			3 427	22	48			3 917	21	48			4 406	21	49
		10			4 284	34	54			4 896	33	54			5 508	33	54
	450	4	0.158	0.134	1 928	5	30	0.180	0.153	2 203	5	31	0.203	0.172	2 479	5	31
		6			2 892	12	41			3 305	12	41			3 718	12	42
		8			3 856	22	48			4 406	21	49			4 957	21	49
		10			4 820	34	54			5 508	33	54			6 197	33	55
	500	4	0.175	0.149	2 142	5	30	0.200	0.170	2 448	5	31	0.225	0.191	2 754	5	32
		6			3 213	12	41			3 672	12	42			4 131	12	42
		8			4 284	21	48			4 896	21	49			5 508	21	50
		10			5 355	33	54			6 120	33	55			6 885	33	55
	550	4	0.193	0.164	2 570	5	31	0.220	0.187	2 693	5	31	0.248	0.210	3 029	5	32
		6			3 856	12	42			4 039	12	42			4 544	12	43
		8			5 141	22	49			5 386	21	49			6 059	21	50
		10			6 426	34	55			6 732	33	55			7 574	33	56
	600	4	0.210	0.179	2 570	5	31	0.240	0.204	2 938	4	28	0.270	0.230	3 305	5	32
		6			3 856	12	42			4 406	8	37			4 957	12	42
		8			5 141	21	49			5 875	14	44			6 610	21	50
		10			6 426	33	55			7 344	32	55			8 262	32	56
	650	4	0.228	0.193	2 785	5	32	0.260	0.221	3 182	5	32	0.293	0.249	3 580	5	32
		6			4 177	12	42			4 774	12	42			5 370	12	43
		8			5 569	21	50			6 365	21	50			7 160	21	50
		10			6 962	33	55			7 956	32	56			8 951	32	56
	700	4	0.245	0.208	2 999	5	32	0.28	0.238	3 427	5	32	0.315	0.268	3 856	5	33
		6			4 498	12	42			5 141	12	43			5 783	12	43
		8			5 998	21	50			6 854	21	50			7 711	21	51
		10			7 497	33	56			8 568	32	56			9 639	32	56
	750	4	0.263	0.223	3 213	5	32	0.3	0.255	3 672	5	32	0.338	0.287	4 131	5	33
		6			4 820	12	42			5 508	12	43			6 197	12	43
		8			6 426	21	50			7 344	21	50			8 262	21	51
		10			8 033	32	56			9 180	32	56			10 328	32	57
	800	4	0.280	0.238	3 427	5	32	0.32	0.272	3 917	5	33	0.360	0.306	4 406	5	32
		6			5 141	12	43			5 875	11	43			6 610	11	42
		8			6 854	21	50			7 834	20	50			8 813	20	50
		10			8 568	32	56			9 792	31	56			11 016	31	56
	850	4	0.298	0.253	3 641	5	32	0.34	0.289	4 162	5	32	0.383	0.325	4 682	5	31
		6			5 462	11	42			6 242	11	43			7 023	11	42
		8			7 283	20	50			8 323	19	50			9 364	19	49
		10			9 104	31	56			10 404	30	56			11 705	30	55
	900	4	0.315	0.268	3 856	5	32	0.360	0.306	4 406	6	35	0.405	0.344	4 957	5	31
		6			5 783	11	43			6 610	12	44			7 436	11	42
		8			7 711	20	50			8 813	26	54			9 914	19	49
		10			9 639	31	56			11 016	30	56			12 393	30	55
	1000	4	0.350	0.298	4 284	5	33	0.400	0.340	4 896	5	33	0.450	0.383	5 508	5	31
		6			6 426	11	43			7 344	11	43			8 262	11	42
		8			8 568	20	51			9 792	19	51			11 016	19	49
		10			10 710	31	56			12 240	30	57			13 770	30	55

8.6. technical parameters of mcr WIP/V, mcr WIP/V-M rectangular dampers

B – nominal width [mm]
H – nominal height [mm]

v – velocity [m/s]
Sk – duct cross-section [m²]
Se – damper active cross-section [m²]

Q – flow [m³/h]
dp – pressure drop [Pa]
L_{WA} – damper noise level [dB]

			height H [mm]														
			500					550					600				
		v [m/s]	Sk [m²]	Se [m²]	Q [m³/h]	dp [Pa]	L_{WA} [dB]	Sk [m²]	Se [m²]	Q [m³/h]	dp [Pa]	L_{WA} [dB]	Sk [m²]	Se [m²]	Q [m³/h]	dp [Pa]	L_{WA} [dB]
width B [mm]	200	4	0.100	0.085	1 224	5	28	0.110	0.094	1 346	5	28	0.120	0.102	1 469	5	28
		6			1 836	12	39			2 020	12	39			2 203	12	39
		8			2 448	21	46			2 693	21	46			2 938	21	46
		10			3 060	33	52			3 366	33	52			3 672	32	52
	250	4	0.125	0.106	1 530	5	29	0.138	0.117	1 683	5	29	0.150	0.128	1 836	5	29
		6			2 295	12	40			2 525	12	40			2 754	12	40
		8			3 060	21	47			3 366	21	47			3 672	21	47
		10			3 825	33	53			4 208	33	53			4 590	32	53
	300	4	0.150	0.128	1 836	5	30	0.165	0.140	2 020	5	30	0.180	0.153	2 203	5	30
		6			2 754	12	40			3 029	12	41			3 305	12	41
		8			3 672	21	48			4 039	21	48			4 406	21	48
		10			4 590	33	54			5 049	33	54			5 508	32	54
	350	4	0.175	0.149	2 142	5	30	0.193	0.164	2 356	5	30	0.210	0.179	2 570	5	30
		6			3 213	12	41			3 534	12	41			3 856	11	41
		8			4 284	21	48			4 712	21	49			5 141	20	48
		10			5 355	32	54			5 891	32	54			6 426	31	54
	400	4	0.200	0.170	2 448	5	31	0.220	0.187	2 693	5	31	0.240	0.204	2 938	5	31
		6			3 672	12	41			4 039	12	42			4 406	11	42
		8			4 896	21	49			5 386	21	49			5 875	20	49
		10			6 120	32	54			6 732	32	55			7 344	31	55
	450	4	0.225	0.191	2 754	5	31	0.248	0.210	3 029	5	32	0.270	0.230	3 305	5	31
		6			4 131	12	42			4 544	12	42			4 957	11	42
		8			5 508	21	49			6 059	21	50			6 610	20	50
		10			6 885	32	55			7 574	32	55			8 262	31	55
	500	4	0.250	0.213	3 060	5	31	0.275	0.234	3 366	5	32	0.300	0.255	3 672	5	32
		6			4 590	11	42			5 049	12	43			5 508	11	43
		8			6 120	22	51			6 732	21	50			7 344	20	50
		10			7 650	32	55			8 415	32	56			9 180	31	56
	550	4	0.275	0.234	3 672	5	32	0.303	0.257	4 039	5	32	0.330	0.281	4 406	5	32
		6			5 508	12	43			6 059	12	43			6 610	11	43
		8			7 344	21	50			8 078	21	50			8 813	20	50
		10			9 180	32	56			10 098	32	56			11 016	31	56
	600	4	0.300	0.255	3 672	5	32	0.330	0.281	4 039	5	32	0.360	0.306	4 406	5	32
		6			5 508	11	43			6 059	11	43			6 610	11	43
		8			7 344	20	50			8 078	20	50			8 813	19	50
		10			9 180	31	56			10 098	31	56			11 016	30	56
	650	4	0.325	0.276	3 978	5	33	0.358	0.304	4 376	5	33	0.390	0.332	4 774	5	33
		6			5 967	12	43			6 564	11	43			7 160	11	43
		8			7 956	21	51			8 752	20	51			9 547	19	51
		10			9 945	31	56			10 940	31	57			11 934	30	57
	700	4	0.350	0.298	4 284	5	33	0.385	0.327	4 712	5	33	0.420	0.357	5 141	5	33
		6			6 426	11	43			7 069	11	44			7 711	11	44
		8			8 568	20	51			9 425	20	51			10 282	19	51
		10			10 710	31	56			11 781	31	57			12 852	30	57
	750	4	0.375	0.319	4 590	5	33	0.413	0.351	5 049	5	33	0.450	0.383	5 508	5	33
		6			6 885	11	43			7 574	11	44			8 262	11	44
		8			9 180	20	51			10 098	20	51			11 016	19	51
		10			11 475	31	57			12 623	31	57			13 770	30	57
	800	4	0.400	0.340	4 896	5	32	0.440	0.374	5 386	5	33	0.480	0.408	5 875	5	33
		6			7 344	11	43			8 078	11	44			8 813	10	44
		8			9 792	19	51			10 771	19	51			11 750	19	51
		10			12 240	30	56			13 464	30	57			14 688	29	57
	850	4	0.425	0.361	5 202	5	32	0.468	0.397	5 722	5	33	0.510	0.434	6 242	4	33
		6			7 803	10	43			8 583	10	44			9 364	10	43
		8			10 404	19	50			11 444	19	51			12 485	18	51
		10			13 005	29	56			14 306	29	57			15 606	28	57
	900	4	0.450	0.383	5 508	5	32	0.495	0.421	6 059	5	33	0.540	0.459	6 610	4	33
		6			8 262	10	43			9 088	10	44			9 914	10	41
		8			11 016	19	50			12 118	19	51			13 219	18	49
		10			13 770	29	56			15 147	29	57			16 524	28	54
	1000	4	0.500	0.425	6 120	5	32	0.550	0.468	6 059	5	34	0.600	0.510	7 344	4	34
		6			9 180	10	43			9 088	10	44			11 016	10	44
		8			12 240	19	50			12 118	19	52			14 688	18	52
		10			15 300	29	56			15 147	29	58			18 360	28	57

8.6. technical parameters of mcr WIP/V, mcr WIP/V-M rectangular dampers

B – nominal width [mm]
H – nominal height [mm]

v – velocity [m/s]
Sk – duct cross-section [m²]
Se – damper active cross-section [m²]

Q – flow [m³/h]
dp – pressure drop [Pa]
L_{WA} – damper noise level [dB]

			height H [mm]														
			650					700					750				
		v [m/s]	Sk [m²]	Se [m²]	Q [m³/h]	dp [Pa]	L_{WA} [dB]	Sk [m²]	Se [m²]	Q [m³/h]	dp [Pa]	L_{WA} [dB]	Sk [m²]	Se [m²]	Q [m³/h]	dp [Pa]	L_{WA} [dB]
width B [mm]	200	4	0.130	0.111	1 591	5	29	0.140	0.119	1 714	5	29	0.150	0.128	1 836	5	29
		6			2 387	12	39			2 570	11	39			2 754	11	40
		8			3 182	21	47			3 427	20	47			3 672	20	47
		10			3 978	32	53			4 284	31	52			4 590	31	53
	250	4	0.163	0.138	1 989	5	30	0.175	0.149	2 142	5	30	0.188	0.159	2 295	5	30
		6			2 984	12	40			3 213	11	40			3 443	11	40
		8			3 978	21	48			4 284	20	48			4 590	20	48
		10			4 973	32	54			5 355	31	53			5 738	31	54
	300	4	0.195	0.166	2 387	5	30	0.210	0.179	2 570	5	30	0.225	0.191	2 754	5	31
		6			3 580	12	41			3 856	11	41			4 131	11	41
		8			4 774	21	49			5 141	20	48			5 508	20	49
		10			5 967	32	54			6 426	31	54			6 885	31	55
	350	4	0.228	0.193	2 785	5	31	0.245	0.208	2 999	5	31	0.263	0.223	3 213	5	31
		6			4 177	11	41			4 498	11	41			4 820	11	42
		8			5 569	20	49			5 998	19	49			6 426	19	49
		10			6 962	31	55			7 497	30	54			8 033	30	55
	400	4	0.260	0.221	3 182	5	31	0.280	0.238	3 427	5	31	0.300	0.255	3 672	5	32
		6			4 774	11	42			5 141	11	42			5 508	11	42
		8			6 365	20	49			6 854	19	49			7 344	19	50
		10			7 956	31	55			8 568	30	55			9 180	30	55
	450	4	0.293	0.249	3 580	5	32	0.315	0.268	3 856	5	32	0.338	0.287	4 131	5	32
		6			5 370	11	42			5 783	11	42			6 197	11	43
		8			7 160	20	50			7 711	19	50			8 262	19	50
		10			8 951	31	56			9 639	30	56			10 328	30	56
	500	4	0.325	0.276	3 978	5	32	0.350	0.298	4 284	5	32	0.375	0.319	4 590	5	32
		6			5 967	11	43			6 426	11	43			6 885	11	43
		8			7 956	20	50			8 568	19	50			9 180	19	51
		10			9 945	31	56			10 710	30	56			11 475	30	56
	550	4	0.358	0.304	4 774	5	33	0.385	0.327	4 712	5	33	0.413	0.351	5 049	5	33
		6			7 160	11	43			7 069	11	43			7 574	11	43
		8			9 547	20	51			9 425	19	51			10 098	19	51
		10			11 934	31	57			11 781	30	56			12 623	30	57
	600	4	0.390	0.332	4 774	5	33	0.420	0.357	5 141	5	33	0.450	0.383	5 508	5	33
		6			7 160	11	44			7 711	11	44			8 262	11	44
		8			9 547	20	51			10 282	19	51			11 016	19	51
		10			11 934	31	57			12 852	30	57			13 770	30	57
	650	4	0.423	0.359	5 171	5	33	0.455	0.387	5 569	5	33	0.488	0.414	5 967	5	33
		6			7 757	11	44			8 354	10	43			8 951	10	44
		8			10 343	19	51			11 138	19	51			11 934	19	51
		10			12 929	30	57			13 923	29	57			14 918	29	57
	700	4	0.455	0.387	5 569	5	33	0.490	0.417	5 998	5	33	0.525	0.446	6 426	5	34
		6			8 354	11	44			8 996	10	44			9 639	10	44
		8			11 138	19	51			11 995	19	51			12 852	19	52
		10			13 923	30	57			14 994	29	57			16 065	29	57
	750	4	0.488	0.414	5 967	5	34	0.525	0.446	6 426	5	34	0.563	0.478	6 885	5	34
		6			8 951	11	44			9 639	10	44			10 328	10	44
		8			11 934	19	52			12 852	19	52			13 770	19	52
		10			14 918	30	57			16 065	29	57			17 213	29	58
	800	4	0.520	0.442	6 365	5	33	0.560	0.476	6 854	4	29	0.600	0.510	7 344	4	34
		6			9 547	10	44			10 282	7	37			11 016	10	44
		8			12 730	19	51			13 709	11	43			14 688	18	52
		10			15 912	29	57			17 136	28	54			18 360	28	57
	850	4	0.553	0.470	6 763	4	33	0.595	0.506	7 283	4	34	0.638	0.542	7 803	4	34
		6			10 144	10	43			10 924	10	44			11 705	10	44
		8			13 525	18	51			14 566	18	52			15 606	18	52
		10			16 907	28	57			18 207	28	57			19 508	28	58
	900	4	0.585	0.497	7 160	4	33	0.630	0.536	7 711	4	33	0.675	0.574	8 262	4	34
		6			10 741	10	43			11 567	10	44			12 393	10	44
		8			14 321	18	51			15 422	17	51			16 524	17	52
		10			17 901	28	57			19 278	27	57			20 655	27	58
	1000	4	0.650	0.553	7 956	4	33	0.700	0.595	8 568	4	34	0.750	0.638	9 180	4	34
		6			11 934	10	43			12 852	10	44			13 770	10	45
		8			15 912	18	51			17 136	17	52			18 360	17	52
		10			19 890	28	57			21 420	27	58			22 950	27	58

8.6. technical parameters of mcr WIP/V, mcr WIP/V-M rectangular dampers

B – nominal width [mm]
H – nominal height [mm]

v – velocity [m/s]
Sk – duct cross-section [m²]
Se – damper active cross-section [m²]

Q – flow [m³/h]
dp – pressure drop [Pa]
L_{WA} – damper noise level [dB]

width B [mm]		height H [mm]																				
		800					850					900					1000					
	v [m/s]	Sk [m²]	Se [m²]	Q [m³/h]	dp [Pa]	L_{WA} [dB]	Sk [m²]	Se [m²]	Q [m³/h]	dp [Pa]	L_{WA} [dB]	Sk [m²]	Se [m2]	Q [m³/h]	dp [Pa]	L_{WA} [dB]	Sk [m²]	Se [m²]	Q [m³/h]	dp [Pa]	L_{WA} [dB]
200	4	0.160	0.136	1 958	5	29	0.170	0.145	2 081	5	29	0.180	0.153	2 203	5	29	0.200	0.170	2 448	5	29
	6			2 938	11	39			3 121	11	40			3 305	10	39			3 672	10	40
	8			3 917	19	47			4 162	19	47			4 406	19	47			4 896	19	47
	10			4 896	30	53			5 202	30	53			5 508	29	53			6 120	29	53
250	4	0.200	0.170	2 448	5	30	0.213	0.181	2 601	5	30	0.225	0.191	2 754	5	30	0.250	0.213	3 060	5	30
	6			3 672	11	40			3 902	11	41			4 131	10	40			4 590	10	41
	8			4 896	19	48			5 202	19	48			5 508	19	48			6 120	19	48
	10			6 120	30	54			6 503	30	54			6 885	29	54			7 650	29	54
300	4	0.240	0.204	2 938	5	31	0.255	0.217	3 121	5	31	0.270	0.230	3 305	5	31	0.300	0.255	3 672	5	31
	6			4 406	11	41			4 682	11	41			4 957	10	41			5 508	10	42
	8			5 875	19	49			6 242	19	49			6 610	19	49			7 344	19	49
	10			7 344	30	54			7 803	30	55			8 262	29	54			9 180	29	55
350	4	0.280	0.238	3 427	5	31	0.298	0.253	3 641	5	31	0.315	0.268	3 856	4	31	0.350	0.298	4 284	4	31
	6			5 141	10	41			5 462	10	42			5 783	10	41			6 426	10	42
	8			6 854	19	49			7 283	19	49			7 711	18	49			8 568	18	49
	10			8 568	29	55			9 104	29	55			9 639	28	55			10 710	28	55
400	4	0.320	0.272	3 917	5	31	0.340	0.289	4 162	5	32	0.360	0.306	4 406	4	31	0.400	0.340	4 896	4	32
	6			5 875	10	42			6 242	10	42			6 610	10	42			7 344	10	42
	8			7 834	19	49			8 323	19	50			8 813	18	49			9 792	18	50
	10			9 792	29	55			10 404	29	55			11 016	28	55			12 240	28	56
450	4	0.360	0.306	4 406	5	32	0.383	0.325	4 682	4	32	0.405	0.344	4 957	4	31	0.450	0.383	5 508	4	32
	6			6 610	10	42			7 023	10	42			7 436	10	42			8 262	10	42
	8			8 813	19	50			9 364	18	50			9 914	17	50			11 016	17	50
	10			11 016	29	56			11 705	28	56			12 393	27	55			13 770	27	56
500	4	0.400	0.340	4 896	5	32	0.425	0.361	5 202	4	32	0.450	0.383	5 508	4	32	0.500	0.425	6 120	4	32
	6			7 344	10	43			7 803	10	43			8 262	10	42			9 180	10	43
	8			9 792	19	50			10 404	18	50			11 016	17	50			12 240	17	50
	10			12 240	29	56			13 005	28	56			13 770	27	56			15 300	27	56
550	4	0.440	0.374	5 386	5	33	0.468	0.397	5 722	4	33	0.495	0.421	6 059	4	32	0.550	0.468	6 732	4	33
	6			8 078	10	43			8 583	10	43			9 088	10	43			10 098	10	43
	8			10 771	19	51			11 444	18	51			12 118	17	50			13 464	17	51
	10			13 464	29	57			14 306	28	56			15 147	27	56			16 830	27	57
600	4	0.480	0.408	5 875	5	33	0.510	0.434	6 242	4	33	0.540	0.459	6 610	4	33	0.600	0.510	7 344	4	33
	6			8 813	10	44			9 364	10	43			9 914	10	43			11 016	10	44
	8			11 750	19	51			12 485	18	51			13 219	17	51			14 688	17	51
	10			14 688	29	57			15 606	28	57			16 524	27	57			18 360	27	57
650	4	0.520	0.442	6 365	5	33	0.553	0.470	6 763	4	33	0.585	0.497	7 160	4	33	0.650	0.553	7 956	4	34
	6			9 547	10	44			10 144	10	44			10 741	10	44			11 934	10	44
	8			12 730	19	52			13 525	18	51			14 321	17	51			15 912	17	52
	10			15 912	29	57			16 907	28	57			17 901	27	57			19 890	27	57
700	4	0.560	0.476	6 854	4	33	0.595	0.506	7 283	4	33	0.630	0.536	7 711	4	33	0.700	0.595	8 568	4	33
	6			10 282	10	44			10 924	10	44			11 567	9	43			12 852	9	44
	8			13 709	18	51			14 566	17	51			15 422	17	51			17 136	17	51
	10			17 136	28	57			18 207	27	57			19 278	26	57			21 420	26	57
750	4	0.600	0.510	7 344	4	34	0.638	0.542	7 803	4	33	0.675	0.574	8 262	4	33	0.750	0.638	9 180	4	34
	6			11 016	10	44			11 705	10	44			12 393	9	44			13 770	9	44
	8			14 688	18	52			15 606	17	51			16 524	17	51			18 360	17	52
	10			18 360	28	57			19 508	27	57			20 655	26	57			22 950	26	57
800	4	0.640	0.544	7 834	4	34	0.680	0.578	8 323	4	34	0.720	0.612	8 813	4	33	0.800	0.680	9 792	4	34
	6			11 750	10	44			12 485	10	44			13 219	9	44			14 688	9	44
	8			15 667	18	52			16 646	17	52			17 626	17	52			19 584	17	52
	10			19 584	28	58			20 808	27	58			22 032	26	57			24 480	26	58
850	4	0.680	0.578	8 323	4	34	0.723	0.614	8 843	4	33	0.765	0.650	9 364	4	34	0.850	0.723	10 404	4	34
	6			12 485	10	44			13 265	9	44			14 045	9	44			15 606	9	45
	8			16 646	17	52			17 687	17	52			18 727	17	52			20 808	17	52
	10			20 808	27	58			22 109	26	57			23 409	26	58			26 010	26	58
900	4	0.720	0.612	8 813	4	34	0.765	0.650	9 364	4	34	0.810	0.689	9 914	4	34	0.900	0.765	11 016	4	34
	6			13 219	10	45			14 045	9	44			14 872	9	45			16 524	9	44
	8			17 626	17	52			18 727	17	52			19 829	17	52			22 032	16	52
	10			22 032	27	58			23 409	26	58			24 786	26	58			27 540	25	58
1000	4	0.800	0.680	9 792	4	34	0.850	0.723	10 404	4	34	0.900	0.765	11 016	4	33	1.000	0.850	12 240	4	34
	6			14 688	9	44			15 606	9	44			16 524	9	44			18 360	9	44
	8			19 584	17	52			20 808	16	52			22 032	15	51			24 480	15	52
	10			24 480	26	58			26 010	25	58			27 540	24	57			30 600	24	58

The mcr WIP fire damper selection program is available at **www.mercor.com.pl**, in the Designer Zone.

8.7. estimated weights of mcr WIP/V, mcr WIP/V-M dampers [kg]

		width B [mm]									
		200	250	300	400	500	600	700	800	900	1000
height H [mm]	200	10	10	10	10	15	17	18	19	22	25
	250	10	10	11	11	16	18	18	21	24	27
	300	10	11	11	12	17	20	21	23	26	28
	350	11	11	11	16	18	21	23	26	28	30
	400	12	12	14	18	19	21	25	29	30	33
	500	15	16	17	19	20	23	27	32	33	35
	600	17	18	20	21	23	26	30	35	37	39
	700	18	18	21	23	25	28	32	35	38	40
	800	20	21	22	24	29	35	37	41	43	49
	900	22	25	25	28	33	35	39	43	49	52
	1000	23	29	32	33	36	42	43	47	53	60

The table shows the weights of dampers with trigger control mechanisms or actuators.

8.8. accessories

8.8.1. mcr KRP connection pipe

The mcr KRP connection pipes are used to connect a circular ventilation duct to a rectangular damper. The connection is a „bare end" pipe. The diameter of the pipe is 2 mm smaller than the diameter of the ventilation duct.

Dimensions:

BxH - damper dimensions [mm]

ØD - diameter of the connection duct [mm]

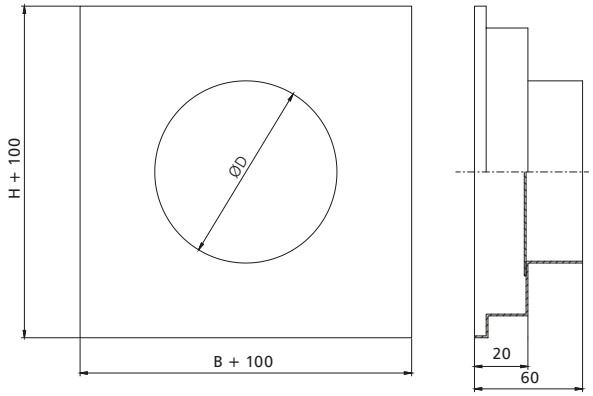

8.9. marking

mcr WIP/V / B x H / 1 / 2 / 3

- 3 – additional parameters
- 2 – material
- 1 – control
- B x H – width x height (nominal)
- mcr WIP/V – damper type

1 – control:

– Belimo trigger control mechanism
BE24 – actuator without a return spring, U = 24 V AC/DC
BE24-ST (with the BKE230-24 option) – actuator without a return spring, for the SBS Control system
BE230 – actuator without a return spring, U = 230 V AC/DC
BLE24 – actuator without a return spring, U = 24 V AC/DC
BLE24-ST (with the BKE230-24 option) – actuator with a return spring, for the SBS Control system
BLE230 – actuator without a return spring, U = 230 V AC/DC

2 – material:

[[no symbol] – galvanised steel, Zn 275 g/m^2 coating
KN – stainless steel
KK – 1.4404 acid-proof steel

3 – additional parameters

Axis of damper rotation
[no symbol] – horizontal axis of rotation
PP – vertical axis of rotation
PP_D – vertical axis of rotation - mechanism at the bottom of the damper
PP_G – vertical axis of rotation - mechanism at the top of the damper

Manufacture standard (see chapter 14.2 of this Catalogue)
[no symbol] – left damper
KP – right damper

Note: the additional parameters to be entered preceded by the "/" sign

example marking:

mcr WIP/V 400 x 400 BLE24

Louvered fire damper with a compact 24 V Belimo actuator with limit switches.

Chapter 13 - power supply and control (p. 203) contains:
- **technical specifications and connection diagrams for the trigger control mechanisms supporting the damper.**

Chapter 14 - additional information (p. 210) contains:
- **location of trigger control mechanisms in relation to the damper - production standards,**
- **table for quick selection of dampers, depending on fire separation and its thickness,**
- **installation distances: damper-ceiling, damper-wall, damper-damper.**

mcr WIP PRO/S multi-blade cut-off fire dampers for comfort ventilation systems

PRODUCT CONFIGURATOR AND CAD MODELS/BIM AT WWW.MERCOR.COM.PL IN THE DESIGNER'S ZONE

BIM CAD

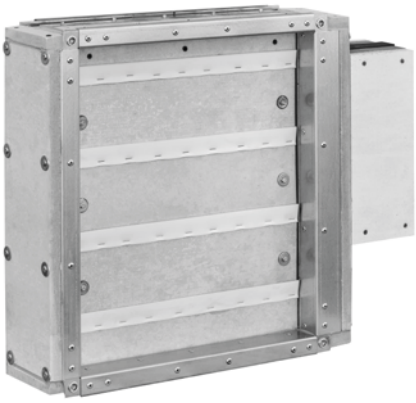

2434-CPR-0003

CTO S.A.

ATEST HIGIENICZNY

- **EI120S, EI90S, ES120**
- **Certificate of constancy of performance 2434-CPR-0003.**
- **Dampers certified for compliance with EN 15650.**
- **Dampers qualified under EN 13501-3 and tested under EN 1366-2.**
- **Narrow louvered fire dampers.**

9.1. application

The mcr WIP PRO/S multi-blade cut-off dampers are designed for use in general ventilation systems, where those systems pass through construction partitions. The mcr WIP PRO/S fire dampers due to their design are intended for use in systems, where the components such as a silencer, bend or supply and extraction grille are installed downstream of the fire damper.

During a fire, they preserve the fire resistance of the construction partition where ventilation and air conditioning ducts are routed through. Furthermore, they prevent the spreading of fire, smoke and burning fumes to the remaining part of the building which is not on fire. During normal operation, the fire damper louvers are open. In case of fire, the shutters close.

In the version designed for explosion hazard zones (EX version), the dampers can operate in gas explosion hazard zone 1 inside and outside ventilation ducts, and dust explosion hazard zone 21 outside these ducts. The dampers have been certified in compliance with the ATEX directive 94/9/EC and meet the requirements of group II category 2G and -/2D:

II 2G Ex h IIC T6 Gb

II -/2D Ex h IIIC T72° -/Db

Ambient temperature: Ta: -20°... +50°C

9.2. design

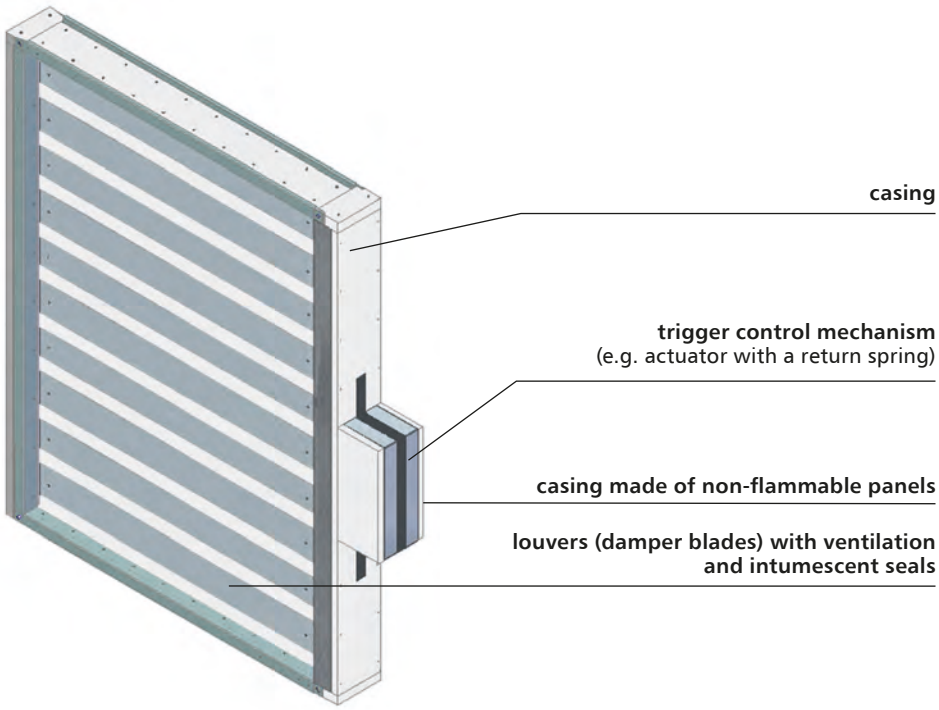

Multi-blade mcr WIP PRO/S damper consists of a rectangular casing made of two steel sections joined with a non-combustible plate using rivets and galvanized steel fasteners, a set of movable blades rotating around their axis and a trigger control mechanism. The fire damper casing is made of fire resistant panels and galvanized steel "C" shape profiles. The device is reinforced on both sides with steel corners. Intumescent and ventilation seals are installed on the inside. Each fire damper blade is made of two 20 mm thick fire resistant plates. Intumescent seal and ventilation seals fixed with staples are installed at the entire blade length. The blades rotate around the axis made by two steel pins. Each pin is mounted in a brass sleeve mounted on a vertical side H of the fire damper casing.

9.3. versions

9.3.1. **mcr WIP PRO/S** – the cut-off fire damper for ventilation ducts with an actuator with a return spring – damper closing and opening with an actuator

During normal operation, the cut-off shutters of the fire damper remain open. In case of fire, the louvers close automatically or remotely by cutting off the power supply.

The mcr WIP PRO/S dampers are equipped with a Belimo trigger control mechanisms **BFL**, **BFN**, **BF**, **BF-TL**, **EXBF** axial actuator with a return spring, powered with 24 V AC/DC or 230 V AC, with thermoelectric trigger 72°C (optionally it is possible to use triggers with the nominal tripping temperature of 95°C). BFL, BFN and BF-series electric actuators are equipped with limit switches used to monitor the louver position, and furthermore, the mechanical position indicator is placed on the actuator.

Fire dampers with analogue BFL, BFN, BF or digital BF-TL Belimo actuators are closed by the thermoelectric trigger or power cut-off as a result of the actuator return spring action. The dampers open when the power supply voltage is applied to the actuator terminals. Furthermore, dampers with those actuators may be opened manually using a key.

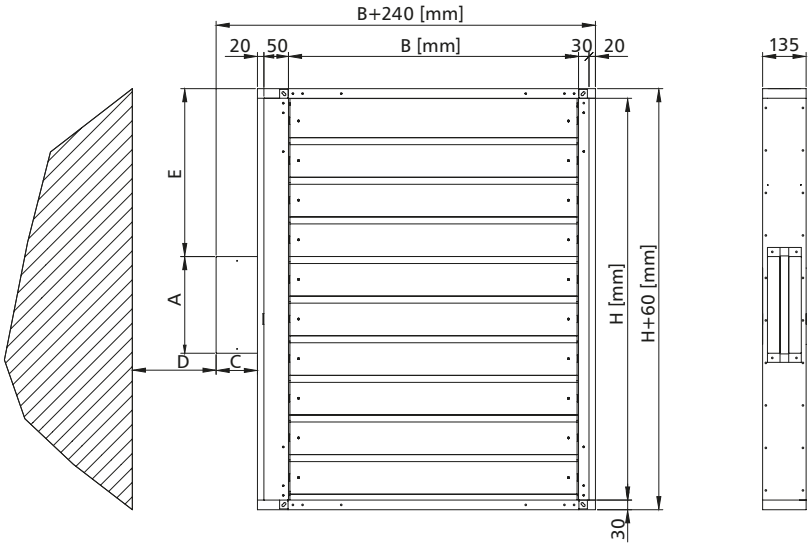

insert symmetrically in relation to the axis of the wall

mechanism	A	C	D	E
BF, BFL, BFN	298	120	75	formula
EXBF	400	175	75	formula

for the even number of blades	for the odd number of blades
E [mm] = (H/2 - 123) + 30	E [mm] = (H/2 - 61.5) + 30

Number of blades = H/123.

9.3.2. **mcr WIP PRO/S** – the cut-off fire damper for ventilation ducts with a spring drive and an integrated thermal trigger, optionally equipped with an electromagnetic trigger and limit switches

During normal operation, the cut-off shutters of the fire damper remain open. In case of fire, the shutters close automatically or, in case of a damper with an electromagnetic trigger, additionally using the fire automation.

The mcr WIP PRO/S dampers are equipped with a **RST-KW1** trigger control mechanism with a drive spring and a cam-lever system. A thermal trigger 74°C (optionally at 95°C) is integrated into the damper mechanism. After the nominal temperature is exceeded, the thermal trigger is tripped and the louvers close. On the RST-KW1 mechanism, there is a mechanical indicator of blades position. It is possible to equip a trigger control mechanism with an electromagnetic trigger activated by the application ("pulse") or removal ("break") of the power supply voltage and with limit switches used to signal the blades position state. The mechanism features test and blades button-release functions. Blades re-opening is activated manually.

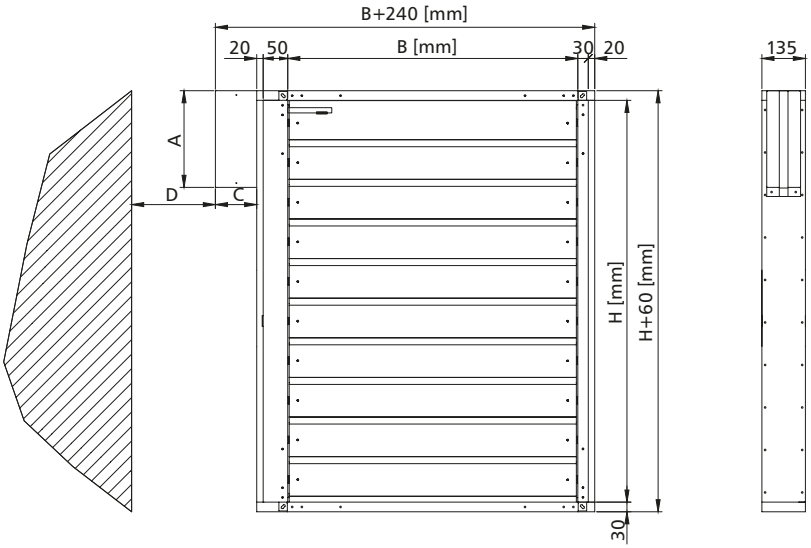

insert symmetrically in relation to the axis of the wall

mechanism	A	C	D
RST-KW1	298	120	75

9.4. dimensions

Rectangular dampers:

- nominal width B: from 110 mm to 900 mm
- nominal height H: from 270 mm to 1250 mm
- the maximum cross-section surface of one damper up to 1.125 m^2

Apart from the standard dimensions, fire dampers may be manufactured with intermediate dimensions (in 10 mm increments, in the given range).

Square fire dampers may also be fitted with round connectors for the spigot connection to the round ducts.

9.5. installation

Rectangular mcr WIP PRO/S fire dampers are class EI120(ve i↔o)S-rated devices, when installed in a concrete partition, min. 110 mm thick, partitions made of full bricks or cellular concrete blocks, min. thickness of 115 mm, lightweight walls with EI120 or higher fire rating, and EI90(ho i↔o)S / E120(ho i↔o)S-rated when installed in ceilings, min. 150 mm thick.

9.5.1. preparation of installation openings

The minimum dimensions of the installation opening that permits correct installation of the mcr WIP PRO/S damper is:

Bo = (B + 240) + 40 mm
Ho = (H + 60) + 40 mm

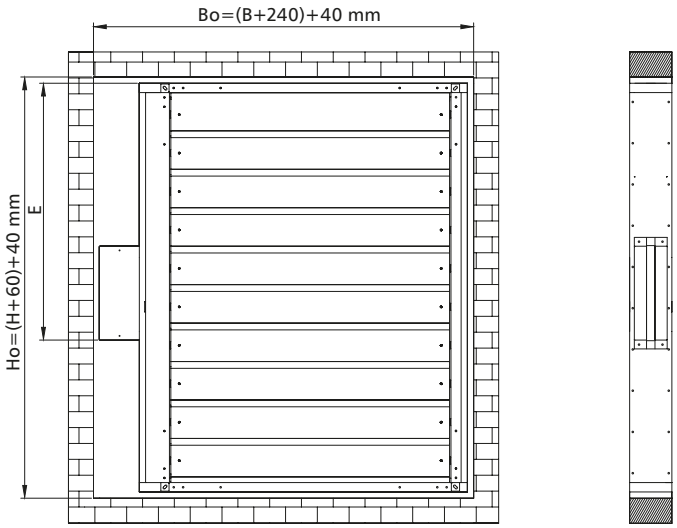

Dimension E (distance from the top fire damper edge to the edge of the trigger control mechanism box) - depending on the dimension H and the trigger control mechanism used:

mechanism	for the even number of blades	for the odd number of blades
BF, BFL, BFN	E [mm] = (H/2 - 123) + 30	E [mm] = (H/2 - 61.5) + 30
RST-KW1	E [mm] = 0	E [mm] = 0

9.5.2. sample installation in concrete block or full brick walls

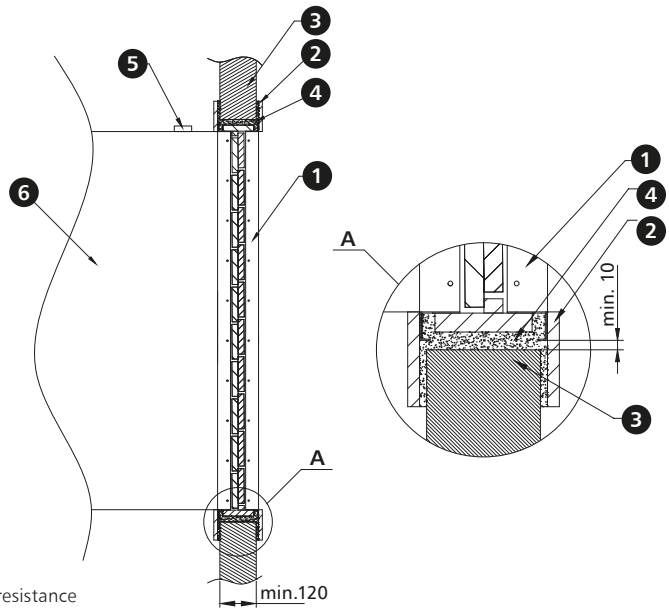

1. mcr WIP PRO fire damper
2. gypsum board trim 100x12.5 mm
3. brick masonry wall
4. cement mortar*
5. thermoelectric trigger
6. ventilation duct

*it is possible to use a different sealing which ensures the required fire resistance

9.5.3. sample installation in lightweight walls

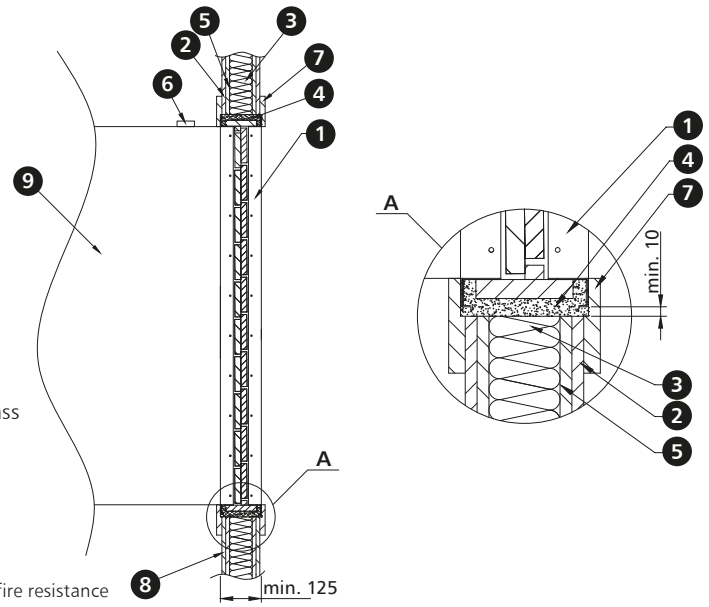

1. mcr WIP PRO fire damper
2. gypsum board 12.5 mm
3. mineral wool with the density of at least 80 kg/m^3, A1 class
4. mortar (e.g. gypsum)*
5. structural profile
6. thermoelectric trigger
7. gypsum board trim 100x12.5 mm
8. gypsum board partition wall
9. ventilation duct

*it is possible to use a different sealing which ensures the required fire resistance

9.5.4. sample installation in ceiling

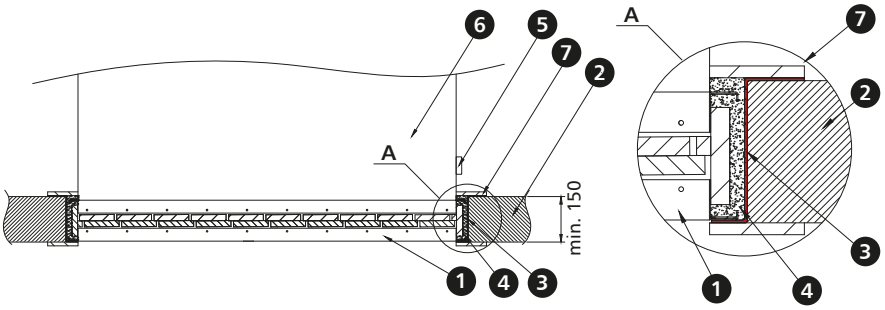

1. mcr WIP PRO fire damper
2. concrete ceiling
3. Z-shape bars
4. cement mortar*
5. thermoelectric trigger
6. ventilation duct
7. gypsum board trims 100x12.5 mm

*it is possible to use a different sealing which ensures the required fire resistance

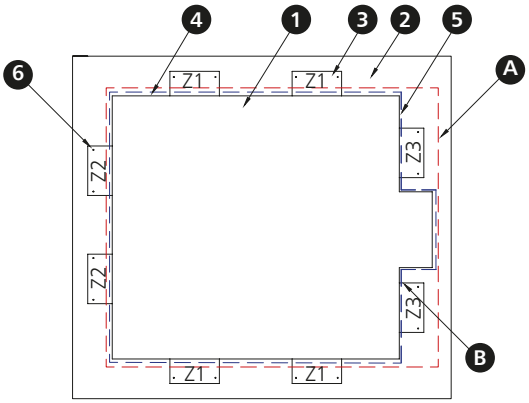

1. mcr WIP PRO fire damper
2. concrete ceiling
3. Z-shape bars
4. cement mortar*
5. construction opening A or B
6. anchor plug M8x80 mm

*it is possible to use a different sealing which ensures the required fire resistance

For mcr WIP PRO/S damper installation in the ceiling, use Z1/Z2/Z3 fasteners compatible with the fire damper and construction opening "5" width as per the guidelines in the operation and maintenance manual. Z1, Z2, Z3 fasteners are not included with the fire damper.

For construction openings with a cut-out for the trigger control mechanism box **B**, use standard Z3 fasteners.

For construction openings in form of a regular rectangular **A**, extend the Z3 fasteners by 120 mm.

9.5.5. sample installation outside the fire partition

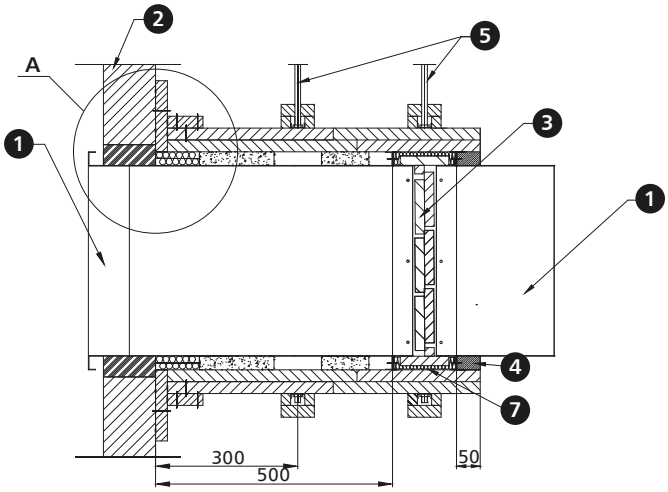

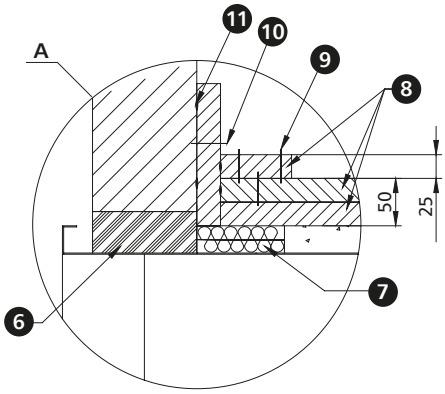

1. ventilation duct
2. partition wall
3. mcr WIP PRO fire damper
4. gypsum infill
5. duct suspension
6. sealing (cement or cement-lime masonry mortar)*
7. mineral wool with the density of at least 80 kg/m^3, A1 class
8. fire protection material ensuring EI120 fire rating or higher
9. screws 3.5 x 50 at ~150 mm centres
10. steel expansion anchor Ø8 x 80 mm
11. board joints sealed with Conlit Glue

*it is possible to use a different sealing which ensures the required fire resistance

9.5.6. sample module installation

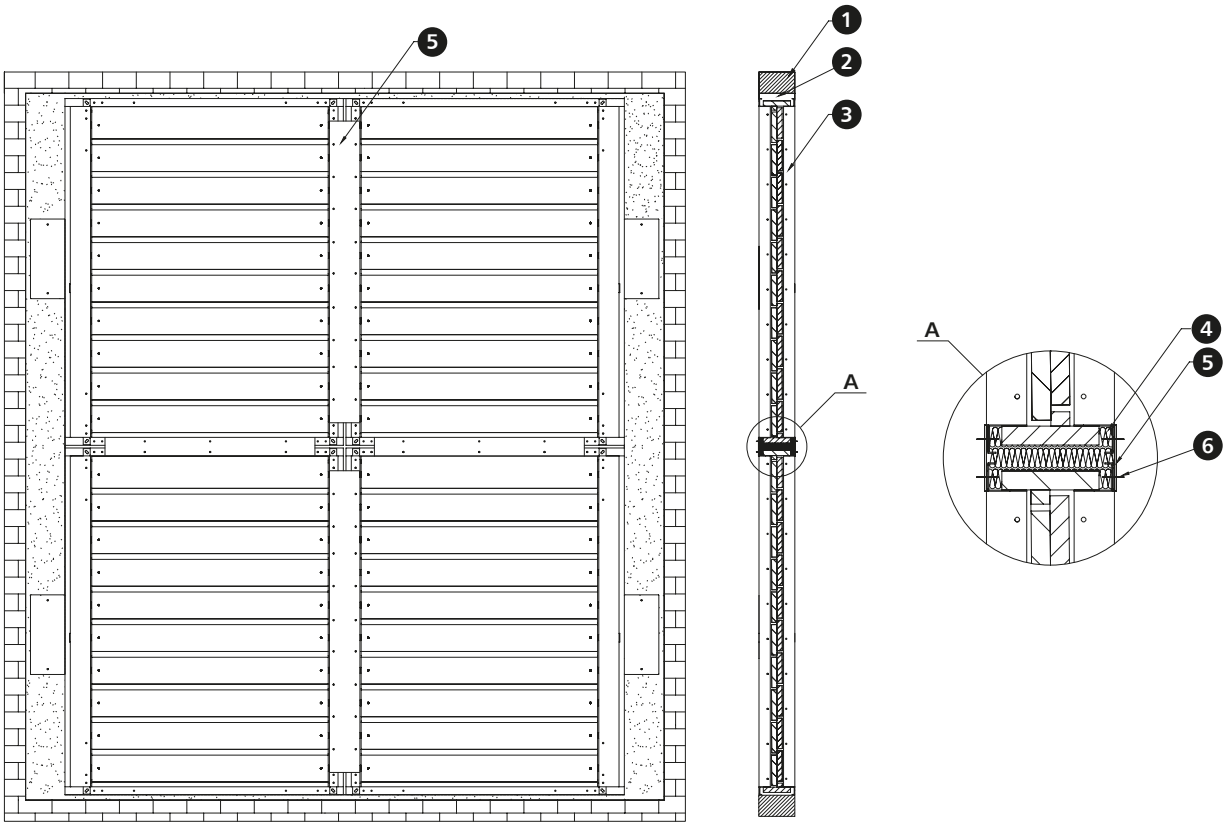

1. e.g. masonry wall
2. e.g. cement mortar*
3. mcr WIP PRO fire damper module
4. mineral wool with the density of at least 80 kg/m^3, A1 class
5. steel flat bar, dimensions:
   - vertical H: width 110 mm, thickness 2 mm
   - horizontal B: width 70 mm, thickness 2 mm
6. ST8x16 screw

*it is possible to use a different sealing which ensures the required fire resistance

Distance between systems and partitions

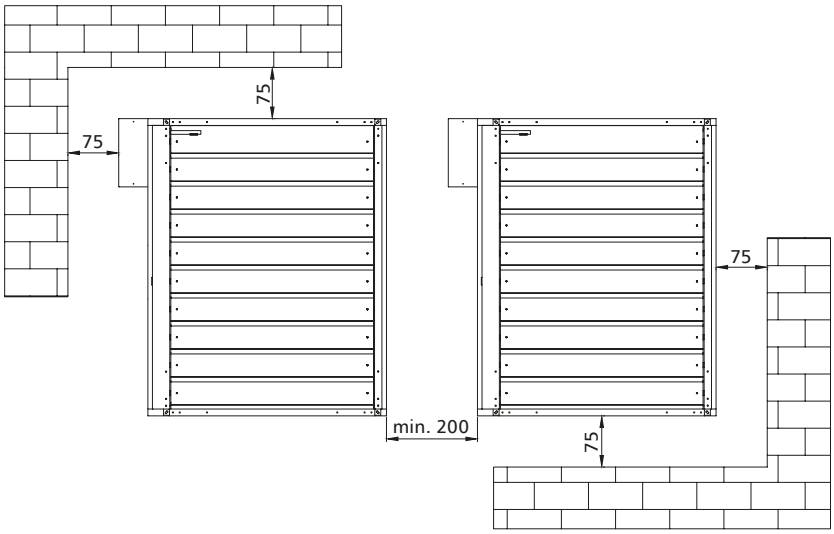

Example applications - installation with masking cover

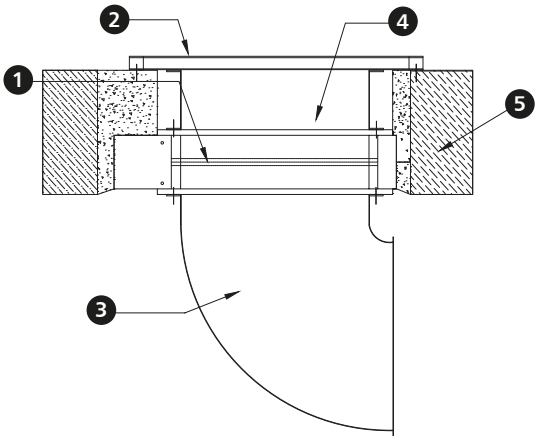

1. mcr WIP PRO fire damper
2. duct cover
3. ventilation duct
4. duct - ventilation straight connection piece
5. wall, ceiling

For mcr WIP PRO/S fire damper with louvers (no single-blade), available free space in front or behind of the fire damper can be used for the installation of its system components including the masking cover, silencer or leading the duct along the wall, using bends or reducer couplings.

9.6. technical parameters of mcr WIP PRO/S rectangular dampers

B – nominal width [mm]
H – nominal height [mm]

v – velocity [m/s]
Sk – duct cross-section [m²]
Se – damper active cross-section [m²]

Q – flow [m³/h]
dp – pressure drop [Pa]
L_{WA} – damper noise level [dB]

			height H [mm]														
			270					300					350				
		v [m/s]	Sk [m²]	Se [m²]	Q [m³/h]	dp [Pa]	L_{WA} [dB]	Sk [m²]	Se [m²]	Q [m³/h]	dp [Pa]	L_{WA} [dB]	Sk [m²]	Se [m²]	Q [m³/h]	dp [Pa]	L_{WA} [dB]
width B [mm]	110	4	0.029	0.019	269	13	33	0.033	0.019	269	14	34	0.039	0.019	269	16	36
		6			404	28	43			404	30	44			404	36	46
		8			539	50	51			539	54	52			539	63	54
		10			673	78	57			673	85	58			673	99	60
	150	4	0.040	0.026	367	13	34	0.045	0.026	367	14	35	0.053	0.026	367	16	37
		6			551	28	45			551	30	46			551	36	48
		8			734	50	52			734	54	53			734	63	55
		10			918	78	58			918	85	59			918	99	61
	200	4	0.053	0.034	490	13	35	0.060	0.034	490	14	36	0.070	0.034	490	16	38
		6			734	28	46			734	30	47			734	36	49
		8			979	50	53			979	54	54			979	63	56
		10			1 224	78	59			1 224	84	60			1 224	99	62
	250	4	0.067	0.043	612	13	36	0.075	0.043	612	14	37	0.088	0.043	612	16	39
		6			918	28	47			918	30	48			918	36	50
		8			1 224	50	54			1 224	54	55			1 224	63	57
		10			1 530	78	60			1 530	85	61			1 530	99	63
	300	4	0.080	0.051	734	13	37	0.090	0.051	734	14	38	0.105	0.051	734	16	40
		6			1 102	28	48			1 102	30	49			1 102	36	51
		8			1 469	50	55			1 469	54	56			1 469	63	58
		10			1 836	78	61			1 836	85	62			1 836	99	64
	350	4	0.093	0.060	857	13	38	0.105	0.060	857	14	39	0.123	0.060	857	16	41
		6			1 285	28	48			1 285	30	49			1 285	36	51
		8			1 714	50	56			1 714	54	57			1 714	63	59
		10			2 142	78	62			2 142	85	63			2 142	99	65
	400	4	0.106	0.068	979	13	38	0.120	0.068	979	14	39	0.140	0.068	979	16	41
		6			1 469	28	49			1 469	30	50			1 469	36	52
		8			1 958	50	56			1 958	54	57			1 958	63	59
		10			2 448	78	62			2 448	84	63			2 448	99	65
	450	4	0.120	0.077	1 102	13	39	0.135	0.077	1 102	14	40	0.158	0.077	1 102	16	42
		6			1 652	28	49			1 652	30	50			1 652	36	52
		8			2 203	50	57			2 203	54	58			2 203	63	60
		10			2 754	78	63			2 754	84	64			2 754	99	66
	500	4	0.133	0.085	1 224	13	39	0.150	0.085	1 224	14	40	0.175	0.085	1 224	16	42
		6			1 836	28	50			1 836	30	51			1 836	36	53
		8			2 448	50	57			2 448	54	58			2 448	63	60
		10			3 060	78	63			3 060	85	64			3 060	99	66
	550	4	0.146	0.094	1 346	2	13	0.165	0.094	1 346	14	41	0.193	0.094	1 346	16	43
		6			2 020	4	23			2 020	30	51			2 020	36	53
		8			2 693	6	31			2 693	54	59			2 693	63	61
		10			3 366	10	36			3 366	84	65			3 366	99	67
	600	4	0.160	0.102	1 469	13	40	0.180	0.102	1 469	14	41	0.210	0.102	1 469	16	43
		6			2 203	28	51			2 203	30	52			2 203	36	54
		8			2 938	50	58			2 938	54	59			2 938	63	61
		10			3 672	78	64			3 672	85	65			3 672	99	67
	650	4	0.173	0.111	1 591	13	40	0.195	0.111	1 591	14	41	0.228	0.111	1 591	16	43
		6			2 387	28	51			2 387	30	52			2 387	36	54
		8			3 182	50	58			3 182	54	59			3 182	63	62
		10			3 978	78	64			3 978	85	65			3 978	99	67
	700	4	0.186	0.119	1 714	13	41	0.210	0.119	1 714	14	42	0.245	0.119	1 714	16	44
		6			2 570	28	51			2 570	30	52			2 570	36	54
		8			3 427	50	59			3 427	54	60			3 427	63	62
		10			4 284	78	65			4 284	85	66			4 284	99	68
	750	4	0.200	0.128	1 836	13	41	0.225	0.128	1 836	14	42	0.263	0.128	1 836	16	44
		6			2 754	28	52			2 754	30	53			2 754	36	55
		8			3 672	50	59			3 672	54	60			3 672	63	62
		10			4 590	78	65			4 590	85	66			4 590	99	68
	800	4	0.213	0.136	1 958	13	41	0.240	0.136	1 958	14	42	0.280	0.136	1 958	16	44
		6			2 938	28	52			2 938	30	53			2 938	36	55
		8			3 917	50	59			3 917	54	60			3 917	63	62
		10			4 896	78	65			4 896	84	66			4 896	99	68
	850	4	0.226	0.145	2 081	13	42	0.255	0.145	2 081	14	43	0.298	0.145	2 081	16	45
		6			3 121	28	52			3 121	30	53			3 121	36	55
		8			4 162	50	60			4 162	54	61			4 162	63	63
		10			5 202	78	65			5 202	84	66			5 202	99	68
	900	4	0.239	0.153	2 203	13	42	0.270	0.153	2 203	14	43	0.315	0.153	2 203	16	45
		6			3 305	28	52			3 305	30	53			3 305	36	55
		8			4 406	50	60			4 406	54	61			4 406	63	63
		10			5 508	78	66			5 508	84	67			5 508	99	69

9.6. technical parameters of mcr WIP PRO/S rectangular dampers

B – nominal width [mm]
H – nominal height [mm]

v – velocity [m/s]
Sk – duct cross-section [m²]
Se – damper active cross-section [m²]

Q – flow [m³/h]
dp – pressure drop [Pa]
L_{WA} – damper noise level [dB]

			height H [mm]														
			400					450					500				
		v [m/s]	Sk [m²]	Se [m²]	Q [m³/h]	dp [Pa]	L_{WA} [dB]	Sk [m²]	Se [m²]	Q [m³/h]	dp [Pa]	L_{WA} [dB]	Sk [m²]	Se [m²]	Q [m³/h]	dp [Pa]	L_{WA} [dB]
width B [mm]	110	4	0.044	0.028	401	13	35	0.050	0.028	401	14	36	0.056	0.037	532	11	34
		6			601	29	45			601	31	46			798	26	45
		8			802	52	53			802	55	54			1 064	45	52
		10			1 002	81	59			1 002	86	60			1 331	71	58
	150	4	0.060	0.038	546	13	36	0.068	0.038	546	14	37	0.077	0.050	726	11	36
		6			820	29	47			820	31	48			1 089	26	46
		8			1 093	52	54			1 093	55	55			1 452	45	54
		10			1 366	81	60			1 366	86	61			1 814	71	60
	200	4	0.080	0.051	729	13	37	0.090	0.051	729	14	38	0.102	0.067	968	11	37
		6			1 093	29	48			1 093	31	49			1 452	26	47
		8			1 457	52	55			1 457	55	56			1 935	45	55
		10			1 822	81	61			1 822	86	62			2 419	71	61
	250	4	0.100	0.063	911	13	38	0.113	0.063	911	14	39	0.128	0.084	1 210	11	38
		6			1 366	29	49			1 366	31	50			1 814	26	48
		8			1 822	52	56			1 822	55	57			2 419	45	56
		10			2 277	81	62			2 277	86	63			3 024	71	62
	300	4	0.120	0.076	1 093	13	39	0.135	0.076	1 093	14	40	0.154	0.101	1 452	11	39
		6			1 639	29	50			1 639	31	51			2 177	26	49
		8			2 186	52	57			2 186	55	58			2 903	45	57
		10			2 732	81	63			2 732	86	64			3 629	71	63
	350	4	0.140	0.089	1 275	13	40	0.158	0.089	1 275	14	41	0.179	0.118	1 693	11	39
		6			1 913	29	50			1 913	31	51			2 540	26	50
		8			2 550	52	58			2 550	55	59			3 387	45	57
		10			3 188	81	64			3 188	86	65			4 234	71	63
	400	4	0.160	0.101	1 457	13	40	0.180	0.101	1 457	14	41	0.205	0.134	1 935	11	40
		6			2 186	29	51			2 186	31	52			2 903	26	50
		8			2 915	52	58			2 915	55	59			3 871	45	58
		10			3 643	81	64			3 643	86	65			4 838	71	64
	450	4	0.180	0.114	1 639	13	41	0.203	0.114	1 639	14	42	0.230	0.151	2 177	11	40
		6			2 459	29	52			2 459	31	52			3 266	26	51
		8			3 279	52	59			3 279	55	60			4 355	45	59
		10			4 099	81	65			4 099	86	66			5 443	71	64
	500	4	0.200	0.127	1 822	13	41	0.225	0.127	1 822	14	42	0.256	0.168	2 419	11	41
		6			2 732	29	52			2 732	31	53			3 629	26	51
		8			3 643	52	59			3 643	55	60			4 838	45	59
		10			4 554	81	65			4 554	86	66			6 048	71	65
	550	4	0.220	0.139	2 004	13	42	0.248	0.139	2 004	14	43	0.282	0.185	2 661	11	41
		6			3 006	29	52			3 006	31	53			3 992	26	52
		8			4 008	52	60			4 008	55	61			5 322	45	59
		10			5 009	81	66			5 009	86	67			6 653	71	65
	600	4	0.240	0.152	2 186	13	42	0.270	0.152	2 186	14	43	0.307	0.202	2 903	11	42
		6			3 279	29	53			3 279	31	54			4 355	26	52
		8			4 372	52	60			4 372	55	61			5 806	45	60
		10			5 465	81	66			5 465	86	67			7 258	71	66
	650	4	0.260	0.164	2 368	13	43	0.293	0.164	2 368	14	43	0.333	0.218	3 145	11	42
		6			3 552	29	53			3 552	31	54			4 717	26	53
		8			4 736	52	61			4 736	55	61			6 290	45	60
		10			5 920	81	66			5 920	86	67			7 862	71	66
	700	4	0.280	0.177	2 550	13	43	0.315	0.177	2 550	14	44	0.358	0.235	3 387	11	42
		6			3 825	29	53			3 825	31	54			5 080	26	53
		8			5 100	52	61			5 100	55	62			6 774	45	60
		10			6 376	81	67			6 376	86	68			8 467	71	66
	750	4	0.300	0.190	2 732	13	43	0.338	0.190	2 732	14	44	0.384	0.252	3 629	11	43
		6			4 099	29	54			4 099	31	55			5 443	26	53
		8			5 465	52	61			5 465	55	62			7 258	45	61
		10			6 831	81	67			6 831	86	68			9 072	71	67
	800	4	0.320	0.202	2 915	13	43	0.360	0.202	2 915	14	43	0.410	0.269	3 871	11	43
		6			4 372	29	54			4 372	31	54			5 806	26	53
		8			5 829	52	62			5 829	55	61			7 741	45	61
		10			7 286	81	67			7 286	86	67			9 677	71	67
	850	4	0.340	0.215	3 097	13	44	0.383	0.215	3 097	14	43	0.435	0.286	4 113	11	43
		6			4 645	29	54			4 645	31	54			6 169	26	53
		8			6 193	52	62			6 193	55	61			8 225	45	61
		10			7 742	81	68			7 742	86	67			10 282	71	67
	900	4	0.360	0.228	3 279	13	44	0.405	0.228	3 279	14	43	0.461	0.302	4 355	11	43
		6			4 918	29	55			4 918	31	54			6 532	26	53
		8			6 558	52	62			6 558	55	61			8 709	45	61
		10			8 197	81	68			8 197	86	67			10 886	71	67

9.6. technical parameters of mcr WIP PRO/S rectangular dampers

B – nominal width [mm]
H – nominal height [mm]

v – velocity [m/s]
Sk – duct cross-section [m²]
Se – damper active cross-section [m²]

Q – flow [m³/h]
dp – pressure drop [Pa]
L_{WA} – damper noise level [dB]

			height H [mm]														
			550					630					650				
		v [m/s]	Sk [m²]	Se [m²]	Q [m³/h]	dp [Pa]	L_{WA} [dB]	Sk [m²]	Se [m²]	Q [m³/h]	dp [Pa]	L_{WA} [dB]	Sk [m²]	Se [m²]	Q [m³/h]	dp [Pa]	L_{WA} [dB]
width B [mm]	110	4	0.061	0.037	532	13	36	0.070	0.046	664	11	35	0.072	0.046	664	12	36
		6			798	29	46			996	25	46			996	27	47
		8			1 064	51	54			1 327	44	53			1 327	48	54
		10			1 331	79	60			1 659	69	59			1 659	76	60
	150	4	0.083	0.050	726	13	37	0.095	0.063	905	11	36	0.098	0.063	905	12	37
		6			1 089	29	48			1 358	25	47			1 358	27	48
		8			1 452	51	55			1 810	44	54			1 810	48	56
		10			1 814	79	61			2 263	69	60			2 263	76	61
	200	4	0.110	0.067	968	13	38	0.127	0.084	1 207	11	38	0.130	0.084	1 207	12	39
		6			1 452	29	49			1 810	25	48			1 810	27	49
		8			1 935	51	56			2 413	44	56			2 413	48	57
		10			2 419	79	62			3 017	69	61			3 017	76	63
	250	4	0.138	0.084	1 210	13	39	0.159	0.105	1 508	11	39	0.163	0.105	1 508	12	40
		6			1 814	29	50			2 263	25	49			2 263	27	50
		8			2 419	51	57			3 017	44	57			3 017	48	58
		10			3 024	79	63			3 771	69	62			3 771	76	64
	300	4	0.165	0.101	1 452	13	40	0.191	0.126	1 810	11	39	0.195	0.126	1 810	12	41
		6			2 177	29	51			2 715	25	50			2 715	27	51
		8			2 903	51	58			3 620	44	57			3 620	48	59
		10			3 629	79	64			4 525	69	63			4 525	76	64
	350	4	0.193	0.118	1 693	13	41	0.222	0.147	2 112	11	40	0.228	0.147	2 112	12	41
		6			2 540	29	51			3 168	25	51			3 168	27	52
		8			3 387	51	59			4 224	44	58			4 224	48	59
		10			4 234	79	65			5 279	69	64			5 279	76	65
	400	4	0.220	0.134	1 935	13	41	0.254	0.168	2 413	11	41	0.260	0.168	2 413	12	42
		6			2 903	29	52			3 620	25	51			3 620	27	52
		8			3 871	51	59			4 827	44	59			4 827	48	60
		10			4 838	79	65			6 034	69	64			6 034	76	66
	450	4	0.248	0.151	2 177	13	42	0.286	0.189	2 715	11	41	0.293	0.189	2 715	12	42
		6			3 266	29	52			4 073	25	52			4 073	27	53
		8			4 355	51	60			5 430	44	59			5 430	48	60
		10			5 443	79	66			6 788	69	65			6 788	76	66
	500	4	0.275	0.168	2 419	13	42	0.318	0.210	3 017	11	42	0.325	0.210	3 017	12	43
		6			3 629	29	53			4 525	25	52			4 525	27	53
		8			4 838	51	60			6 034	44	60			6 034	48	61
		10			6 048	79	66			7 542	69	65			7 542	76	67
	550	4	0.303	0.185	2 661	13	43	0.349	0.230	3 318	11	42	0.358	0.230	3 318	12	43
		6			3 992	29	53			4 978	25	53			4 978	27	54
		8			5 322	51	61			6 637	44	60			6 637	48	61
		10			6 653	79	67			8 296	69	66			8 296	76	67
	600	4	0.330	0.202	2 903	13	43	0.381	0.251	3 620	11	42	0.390	0.251	3 620	12	44
		6			4 355	29	54			5 430	25	53			5 430	27	54
		8			5 806	51	61			7 240	44	60			7 240	48	62
		10			7 258	79	67			9 050	69	66			9 050	76	67
	650	4	0.358	0.218	3 145	13	44	0.413	0.272	3 922	11	43	0.423	0.272	3 922	12	44
		6			4 717	29	54			5 883	25	53			5 883	27	54
		8			6 290	51	62			7 844	44	61			7 844	48	62
		10			7 862	79	67			9 805	69	67			9 805	76	68
	700	4	0.385	0.235	3 387	13	44	0.445	0.293	4 224	11	43	0.455	0.293	4 224	12	44
		6			5 080	29	54			6 335	25	54			6 335	27	55
		8			6 774	51	62			8 447	44	61			8 447	48	62
		10			8 467	79	68			10 559	69	67			10 559	76	68
	750	4	0.413	0.252	3 629	13	44	0.476	0.314	4 525	11	43	0.488	0.314	4 525	12	44
		6			5 443	29	55			6 788	25	54			6 788	27	55
		8			7 258	51	62			9 050	44	61			9 050	48	63
		10			9 072	79	68			11 313	69	67			11 313	76	68
	800	4	0.440	0.269	3 871	13	44	0.508	0.335	4 827	11	44	0.520	0.335	4 827	12	44
		6			5 806	29	55			7 240	25	54			7 240	27	55
		8			7 741	51	62			9 654	44	62			9 654	48	63
		10			9 677	79	68			12 067	69	67			12 067	76	68
	850	4	0.468	0.286	4 113	13	45	0.540	0.356	5 129	11	44	0.553	0.356	5 129	12	44
		6			6 169	29	55			7 693	25	54			7 693	27	55
		8			8 225	51	63			10 257	44	62			10 257	48	63
		10			10 282	79	69			12 821	69	68			12 821	76	68
	900	4	0.495	0.302	4 355	13	45	0.572	0.377	5 430	11	44	0.585	0.377	5 430	12	44
		6			6 532	29	56			8 145	25	52			8 145	27	55
		8			8 709	51	63			10 860	44	59			10 860	48	63
		10			10 886	79	69			13 576	69	65			13 576	76	68

9.6. technical parameters of mcr WIP PRO/S rectangular dampers

B – nominal width [mm]
H – nominal height [mm]

v – velocity [m/s]
Sk – duct cross-section [m²]
Se – damper active cross-section [m²]

Q – flow [m³/h]
dp – pressure drop [Pa]
L_{WA} – damper noise level [dB]

			height H [mm]														
			700					750					800				
		v [m/s]	Sk [m²]	Se [m²]	Q [m³/h]	dp [Pa]	L_{WA} [dB]	Sk [m²]	Se [m²]	Q [m³/h]	dp [Pa]	L_{WA} [dB]	Sk [m²]	Se [m²]	Q [m³/h]	dp [Pa]	L_{WA}
width B [mm]	110	4	0.077	0.046	664	14	38	0.083	0.060	859	9	33	0.088	0.055	795	10	**34**
		6			996	30	48			1 288	20	44			1 193	22	45
		8			1 327	54	56			1 717	35	51			1 590	40	52
		10			1 659	85	61			2 146	55	57			1 988	62	58
	150	4	0.105	0.063	905	14	39	0.114	0.081	1 171	9	34	0.120	0.075	1 084	10	36
		6			1 358	30	49			1 756	20	45			1 626	22	46
		8			1 810	54	57			2 341	35	52			2 169	40	54
		10			2 263	85	63			2 927	55	58			2 711	62	60
	200	4	0.140	0.084	1 207	14	40	0.152	0.108	1 561	9	36	0.160	0.100	1 446	10	37
		6			1 810	30	51			2 341	20	46			2 169	22	48
		8			2 413	54	58			3 122	35	54			2 892	40	55
		10			3 017	85	64			3 902	55	60			3 614	62	61
	250	4	0.175	0.105	1 508	14	41	0.190	0.136	1 951	9	37	0.200	0.126	1 807	10	38
		6			2 263	30	52			2 927	20	47			2 711	22	49
		8			3 017	54	59			3 902	35	55			3 614	40	56
		10			3 771	85	65			4 878	55	60			4 518	62	62
	300	4	0.210	0.126	1 810	14	42	0.227	0.163	2 341	9	37	0.240	0.151	2 169	10	39
		6			2 715	30	53			3 512	20	48			3 253	22	49
		8			3 620	54	60			4 683	35	55			4 337	40	57
		10			4 525	85	66			5 854	55	61			5 422	62	63
	350	4	0.245	0.147	2 112	14	43	0.265	0.190	2 732	9	38	0.280	0.176	2 530	10	39
		6			3 168	30	53			4 098	20	49			3 795	22	50
		8			4 224	54	61			5 463	35	56			5 060	40	57
		10			5 279	85	66			6 829	55	62			6 325	62	63
	400	4	0.280	0.168	2 413	14	43	0.303	0.217	3 122	9	39	0.320	0.201	2 892	10	40
		6			3 620	30	54			4 683	20	49			4 337	22	51
		8			4 827	54	61			6 244	35	57			5 783	40	58
		10			6 034	85	67			7 805	55	63			7 229	62	64
	450	4	0.315	0.189	2 715	14	44	0.341	0.244	3 512	9	39	0.360	0.226	3 253	10	41
		6			4 073	30	54			5 268	20	50			4 879	22	51
		8			5 430	54	62			7 024	35	57			6 506	40	59
		10			6 788	85	68			8 780	55	63			8 132	62	64
	500	4	0.350	0.210	3 017	14	44	0.379	0.271	3 902	9	40	0.400	0.251	3 614	10	41
		6			4 525	30	55			5 854	20	50			5 422	22	52
		8			6 034	54	62			7 805	35	58			7 229	40	59
		10			7 542	85	68			9 756	55	63			9 036	62	65
	550	4	0.385	0.230	3 318	14	45	0.417	0.298	4 293	9	40	0.440	0.276	3 976	10	41
		6			4 978	30	55			6 439	20	51			5 964	22	52
		8			6 637	54	63			8 585	35	58			7 952	40	59
		10			8 296	85	68			10 732	55	64			9 940	62	65
	600	4	0.420	0.251	3 620	14	45	0.455	0.325	4 683	9	40	0.480	0.301	4 337	10	42
		6			5 430	30	56			7 024	20	51			6 506	22	52
		8			7 240	54	63			9 366	35	58			8 675	40	60
		10			9 050	85	69			11 707	55	64			10 843	62	66
	650	4	0.455	0.272	3 922	14	45	0.493	0.352	5 073	9	41	0.520	0.326	4 699	10	42
		6			5 883	30	56			7 610	20	51			7 048	22	53
		8			7 844	54	63			10 146	35	59			9 397	40	60
		10			9 805	85	69			12 683	55	65			11 747	62	66
	700	4	0.490	0.293	4 224	14	46	0.531	0.379	5 463	9	41	0.560	0.351	5 060	10	42
		6			6 335	30	56			8 195	20	52			7 590	22	53
		8			8 447	54	64			10 927	35	59			10 120	40	61
		10			10 559	85	69			13 658	55	65			12 650	62	66
	750	4	0.525	0.314	4 525	14	46	0.569	0.407	5 854	9	41	0.600	0.377	5 422	10	43
		6			6 788	30	56			8 780	20	52			8 132	22	53
		8			9 050	54	64			11 707	35	59			10 843	40	61
		10			11 313	85	70			14 634	55	65			13 554	62	67
	800	4	0.560	0.335	4 827	14	44	0.606	0.434	6 244	9	42	0.640	0.402	5 783	10	43
		6			7 240	30	55			9 366	20	52			8 675	22	54
		8			9 654	54	62			12 488	35	60			11 566	40	61
		10			12 067	85	67			15 610	55	66			14 458	62	67
	850	4	0.595	0.356	5 129	14	46	0.644	0.461	6 634	9	42	0.680	0.427	6 144	10	43
		6			7 693	30	57			9 951	20	52			9 217	22	54
		8			10 257	54	65			13 268	35	60			12 289	40	61
		10			12 821	85	70			16 585	55	66			15 361	62	67
	900	4	0.630	0.377	5 430	14	47	0.682	0.488	7 024	9	42	0.720	0.452	6 506	10	44
		6			8 145	30	57			10 536	20	53			9 759	22	54
		8			10 860	54	65			14 049	35	60			13 012	40	62
		10			13 576	85	71			17 561	55	66			16 265	62	67

9.6. technical parameters of mcr WIP PRO/S rectangular dampers

B – nominal width [mm]
H – nominal height [mm]

v – velocity [m/s]
Sk – duct cross-section [m²]
Se – damper active cross-section [m²]

Q – flow [m³/h]
dp – pressure drop [Pa]
L_{WA} – damper noise level [dB]

			height H [mm]														
			850					900					950				
		v [m/s]	Sk [m²]	Se [m²]	Q [m³/h]	dp [Pa]	L_{WA} [dB]	Sk [m²]	Se [m²]	Q [m³/h]	dp [Pa]	L_{WA} [dB]	Sk [m²]	Se [m²]	Q [m³/h]	dp [Pa]	L_{WA} [dB]
width B [mm]	110	4	0.097	0.064	927	12	38	0.099	0.064	927	13	39	0.105	0.064	927	14	40
		6			1 390	27	48			1 390	30	49			1 390	32	50
		8			1 853	49	56			1 853	53	57			1 853	57	58
		10			2 317	76	62			2 317	83	63			2 317	89	64
	150	4	0.132	0.088	1 264	12	39	0.135	0.088	1 264	13	40	0.143	0.088	1 264	14	41
		6			1 895	27	50			1 895	30	51			1 895	32	52
		8			2 527	49	57			2 527	53	58			2 527	57	59
		10			3 159	76	63			3 159	83	64			3 159	89	65
	200	4	0.176	0.117	1 685	12	40	0.180	0.117	1 685	13	41	0.190	0.117	1 685	14	42
		6			2 527	27	51			2 527	30	52			2 527	32	53
		8			3 370	49	58			3 370	53	59			3 370	57	60
		10			4 212	76	64			4 212	83	65			4 212	89	66
	250	4	0.220	0.146	2 106	12	41	0.225	0.146	2 106	13	42	0.238	0.146	2 106	14	43
		6			3 159	27	52			3 159	30	53			3 159	32	54
		8			4 212	49	59			4 212	53	60			4 212	57	61
		10			5 265	76	65			5 265	83	66			5 265	89	67
	300	4	0.264	0.176	2 527	12	42	0.270	0.176	2 527	13	43	0.285	0.176	2 527	14	44
		6			3 791	27	53			3 791	30	54			3 791	32	55
		8			5 054	49	60			5 054	53	61			5 054	57	62
		10			6 318	76	66			6 318	83	67			6 318	89	68
	350	4	0.308	0.205	2 948	12	43	0.315	0.205	2 948	13	44	0.333	0.205	2 948	14	45
		6			4 423	27	53			4 423	30	54			4 423	32	55
		8			5 897	49	61			5 897	53	62			5 897	57	63
		10			7 371	76	67			7 371	83	68			7 371	89	69
	400	4	0.352	0.234	3 370	12	43	0.360	0.234	3 370	13	44	0.380	0.234	3 370	14	45
		6			5 054	27	54			5 054	30	55			5 054	32	56
		8			6 739	49	61			6 739	53	62			6 739	57	63
		10			8 424	76	67			8 424	83	68			8 424	89	69
	450	4	0.396	0.263	3 791	12	44	0.405	0.263	3 791	13	45	0.428	0.263	3 791	14	46
		6			5 686	27	54			5 686	30	55			5 686	32	56
		8			7 582	49	62			7 582	53	63			7 582	57	64
		10			9 477	76	68			9 477	83	69			9 477	89	70
	500	4	0.441	0.293	4 212	12	44	0.450	0.293	4 212	13	45	0.475	0.293	4 212	14	46
		6			6 318	27	55			6 318	30	56			6 318	32	57
		8			8 424	49	62			8 424	53	63			8 424	57	64
		10			10 530	76	68			10 530	83	69			10 530	89	70
	550	4	0.485	0.322	4 633	12	45	0.495	0.322	4 633	13	46	0.523	0.322	4 633	14	47
		6			6 950	27	55			6 950	30	56			6 950	32	57
		8			9 266	49	63			9 266	53	64			9 266	57	65
		10			11 583	76	69			11 583	83	70			11 583	89	70
	600	4	0.529	0.351	5 054	12	45	0.540	0.351	5 054	13	46	0.570	0.351	5 054	14	47
		6			7 582	27	56			7 582	30	57			7 582	32	58
		8			10 109	49	63			10 109	53	64			10 109	57	65
		10			12 636	76	69			12 636	83	70			12 636	89	71
	650	4	0.573	0.380	5 476	12	45	0.585	0.380	5 476	13	46	0.618	0.380	5 476	14	47
		6			8 213	27	56			8 213	30	57			8 213	32	58
		8			10 951	49	63			10 951	53	65			10 951	57	65
		10			13 689	76	69			13 689	83	70			13 689	89	71
	700	4	0.617	0.410	5 897	12	46	0.630	0.410	5 897	13	47	0.665	0.410	5 897	14	48
		6			8 845	27	56			8 845	30	57			8 845	32	58
		8			11 794	49	64			11 794	53	65			11 794	57	66
		10			14 742	76	70			14 742	83	71			14 742	89	72
	750	4	0.661	0.439	6 318	12	46	0.675	0.439	6 318	13	47	0.713	0.439	6 318	14	48
		6			9 477	27	57			9 477	30	58			9 477	32	59
		8			12 636	49	64			12 636	53	65			12 636	57	66
		10			15 795	76	70			15 795	83	71			15 795	89	72
	800	4	0.705	0.468	6 739	12	46	0.720	0.468	6 739	13	47	0.760	0.468	6 739	14	48
		6			10 109	27	57			10 109	30	58			10 109	32	59
		8			13 478	49	64			13 478	53	65			13 478	57	66
		10			16 848	76	70			16 848	83	71			16 848	89	72
	850	4	0.749	0.497	7 160	12	47	0.765	0.497	7 160	13	48	0.808	0.497	7 160	14	49
		6			10 741	27	57			10 741	30	58			10 741	32	59
		8			14 321	49	65			14 321	53	66			14 321	57	67
		10			17 901	76	70			17 901	83	71			17 901	89	72
	900	4	0.793	0.527	7 582	12	47	0.810	0.527	7 582	13	48	0.855	0.527	7 582	14	49
		6			11 372	27	57			11 372	30	58			11 372	32	59
		8			15 163	49	65			15 163	53	66			15 163	57	67
		10			18 954	76	71			18 954	83	72			18 954	89	73

9.6. technical parameters of mcr WIP PRO/S rectangular dampers

B – nominal width [mm]
H – nominal height [mm]

v – velocity [m/s]
Sk – duct cross-section [m²]
Se – damper active cross-section [m²]

Q – flow [m³/h]
dp – pressure drop [Pa]
L_{WA} – damper noise level [dB]

			height H [mm]														
			1000					1050					1100				
width B [mm]		v [m/s]	Sk [m²]	Se [m²]	Q [m³/h]	dp [Pa]	L_{WA} [dB]	Sk [m²]	Se [m²]	Q [m³/h]	dp [Pa]	L_{WA} [dB]	Sk [m²]	Se [m²]	Q [m³/h]	dp [Pa]	L_{WA} [dB]
	110	4	0.110	0.073	1 058	12	38	0.116	0.073	1 058	13	39	0.124	0.083	1 190	11	37
		6			1 587	27	49			1 587	29	49			1 784	24	48
		8			2 116	48	56			2 116	51	57			2 379	43	55
		10			2 645	76	62			2 645	79	63			2 974	67	61
	150	4	0.151	0.100	1 443	12	39	0.158	0.100	1 443	13	40	0.169	0.113	1 622	11	38
		6			2 164	27	50			2 164	29	51			2 433	24	49
		8			2 886	48	58			2 886	51	58			3 244	43	56
		10			3 607	76	63			3 607	79	64			4 055	67	62
	200	4	0.201	0.134	1 924	12	41	0.210	0.134	1 924	13	41	0.225	0.150	2 163	11	39
		6			2 886	27	51			2 886	29	52			3 244	24	50
		8			3 848	48	59			3 848	51	59			4 326	43	57
		10			4 810	76	65			4 810	79	65			5 407	67	63
	250	4	0.251	0.167	2 405	12	42	0.263	0.167	2 405	13	42	0.282	0.188	2 704	11	40
		6			3 607	27	52			3 607	29	53			4 055	24	51
		8			4 810	48	60			4 810	51	60			5 407	43	58
		10			6 012	76	66			6 012	79	66			6 759	67	64
	300	4	0.301	0.200	2 886	12	42	0.315	0.200	2 886	13	43	0.338	0.225	3 244	11	41
		6			4 329	27	53			4 329	29	54			4 866	24	51
		8			5 772	48	61			5 772	51	61			6 489	43	59
		10			7 214	76	66			7 214	79	67			8 111	67	65
	350	4	0.351	0.234	3 367	12	43	0.368	0.234	3 367	13	44	0.394	0.263	3 785	11	42
		6			5 050	27	54			5 050	29	54			5 678	24	52
		8			6 733	48	61			6 733	51	62			7 570	43	60
		10			8 417	76	67			8 417	79	68			9 463	67	65
	400	4	0.402	0.267	3 848	12	44	0.420	0.267	3 848	13	44	0.451	0.300	4 326	11	42
		6			5 772	27	54			5 772	29	55			6 489	24	53
		8			7 695	48	62			7 695	51	62			8 652	43	60
		10			9 619	76	68			9 619	79	68			10 814	67	66
	450	4	0.452	0.301	4 329	12	44	0.473	0.301	4 329	13	45	0.507	0.338	4 866	11	43
		6			6 493	27	55			6 493	29	55			7 300	24	53
		8			8 657	48	62			8 657	51	63			9 733	43	61
		10			10 822	76	68			10 822	79	69			12 166	67	67
	500	4	0.502	0.334	4 810	12	45	0.525	0.334	4 810	13	45	0.564	0.376	5 407	11	43
		6			7 214	27	55			7 214	29	56			8 111	24	54
		8			9 619	48	63			9 619	51	63			10 814	43	61
		10			12 024	76	69			12 024	79	69			13 518	67	67
	550	4	0.552	0.367	5 291	12	45	0.578	0.367	5 291	13	46	0.620	0.413	5 948	11	44
		6			7 936	27	56			7 936	29	56			8 922	24	54
		8			10 581	48	63			10 581	51	64			11 896	43	62
		10			13 226	76	69			13 226	79	70			14 870	67	67
	600	4	0.602	0.401	5 772	12	46	0.630	0.401	5 772	13	46	0.676	0.451	6 489	11	44
		6			8 657	27	56			8 657	29	57			9 733	24	54
		8			11 543	48	64			11 543	51	64			12 977	43	62
		10			14 429	76	69			14 429	79	70			16 222	67	68
	650	4	0.653	0.434	6 252	12	46	0.683	0.434	6 252	13	46	0.733	0.488	7 029	11	44
		6			9 379	27	56			9 379	29	57			10 544	24	55
		8			12 505	48	64			12 505	51	65			14 059	43	62
		10			15 631	76	70			15 631	79	70			17 573	67	68
	700	4	0.703	0.468	6 733	12	46	0.735	0.468	6 733	13	47	0.789	0.526	7 570	11	45
		6			10 100	27	57			10 100	29	57			11 355	24	55
		8			13 467	48	64			13 467	51	65			15 140	43	63
		10			16 834	76	70			16 834	79	71			18 925	67	68
	750	4	0.753	0.501	7 214	12	46	0.788	0.501	7 214	13	47	0.845	0.563	8 111	11	45
		6			10 822	27	57			10 822	29	58			12 166	24	55
		8			14 429	48	65			14 429	51	65			16 222	43	63
		10			18 036	76	70			18 036	79	71			20 277	67	69
	800	4	0.803	0.534	7 695	12	47	0.840	0.534	7 695	13	47	0.902	0.601	8 652	11	45
		6			11 543	27	57			11 543	29	58			12 977	24	56
		8			15 391	48	65			15 391	51	65			17 303	43	63
		10			19 238	76	71			19 238	79	71			21 629	67	69
	850	4	0.853	0.568	8 176	12	47	0.893	0.568	8 176	13	48	0.958	0.638	9 192	11	45
		6			12 264	27	58			12 264	29	58			13 788	24	56
		8			16 353	48	65			16 353	51	66			18 384	43	63
		10			20 441	76	71			20 441	79	72			22 981	67	69
	900	4	0.904	0.601	8 657	12	47	0.945	0.601	8 657	13	48	1.014	0.676	9 733	11	46
		6			12 986	27	58			12 986	29	58			14 599	24	56
		8			17 315	48	65			17 315	51	66			19 466	43	64
		10			21 643	76	71			21 643	79	72			24 332	67	70

9.6. technical parameters of mcr WIP PRO/S rectangular dampers

B – nominal width [mm]
H – nominal height [mm]

v – velocity [m/s]
Sk – duct cross-section [m²]
Se – damper active cross-section [m²]

Q – flow [m³/h]
dp – pressure drop [Pa]
L_{WA} – damper noise level [dB]

			height H [mm]														
			1150					1200					1250				
		v [m/s]	Sk [m²]	Se [m²]	Q [m³/h]	dp [Pa]	L_{WA} [dB]	Sk [m²]	Se [m²]	Q [m³/h]	dp [Pa]	L_{WA} [dB]	Sk [m²]	Se [m²]	Q [m³/h]	dp [Pa]	L_{WA} [dB]
width B [mm]	110	4	0.127	0.083	1 190	13	40	0.132	0.083	1 190	13	40	0.138	0.092	1 321	11	37
		6			1 784	29	50			1 784	30	51			1 982	24	48
		8			2 379	52	58			2 379	54	58			2 642	43	55
		10			2 974	81	63			2 974	84	64			3 303	66	61
	150	4	0.173	0.113	1 622	13	41	0.180	0.113	1 622	13	41	0.188	0.125	1 801	11	39
		6			2 433	29	52			2 433	30	52			2 702	24	49
		8			3 244	52	59			3 244	54	59			3 603	43	57
		10			4 055	81	65			4 055	84	65			4 504	66	63
	200	4	0.230	0.150	2 163	13	42	0.240	0.150	2 163	13	42	0.250	0.167	2 402	11	39
		6			3 244	29	52			3 244	30	53			3 603	24	50
		8			4 326	52	60			4 326	54	60			4 804	43	57
		10			5 407	81	66			5 407	84	66			6 005	66	63
	250	4	0.288	0.188	2 704	13	43	0.300	0.188	2 704	13	43	0.313	0.209	3 002	11	40
		6			4 055	29	53			4 055	30	54			4 504	24	51
		8			5 407	52	61			5 407	54	61			6 005	43	58
		10			6 759	81	67			6 759	84	67			7 506	66	64
	300	4	0.345	0.225	3 244	13	43	0.360	0.225	3 244	13	44	0.375	0.250	3 603	11	41
		6			4 866	29	54			4 866	30	54			5 404	24	51
		8			6 489	52	61			6 489	54	62			7 206	43	59
		10			8 111	81	67			8 111	84	68			9 007	66	65
	350	4	0.403	0.263	3 785	13	44	0.420	0.263	3 785	13	45	0.438	0.292	4 203	11	41
		6			5 678	29	55			5 678	30	55			6 305	24	52
		8			7 570	52	62			7 570	54	63			8 407	43	60
		10			9 463	81	68			9 463	84	68			10 508	66	65
	400	4	0.460	0.300	4 326	13	45	0.480	0.300	4 326	13	45	0.500	0.334	4 804	11	42
		6			6 489	29	55			6 489	30	56			7 206	24	53
		8			8 652	52	63			8 652	54	63			9 608	43	60
		10			10 814	81	69			10 814	84	69			12 010	66	66
	450	4	0.518	0.338	4 866	13	45	0.540	0.338	4 866	13	46	0.563	0.375	5 404	11	43
		6			7 300	29	56			7 300	30	56			8 106	24	53
		8			9 733	52	63			9 733	54	64			10 809	43	61
		10			12 166	81	69			12 166	84	70			13 511	66	66
	500	4	0.575	0.376	5 407	13	46	0.600	0.376	5 407	13	46	0.625	0.417	6 005	11	43
		6			8 111	29	56			8 111	30	57			9 007	24	54
		8			10 814	52	64			10 814	54	64			12 010	43	61
		10			13 518	81	70			13 518	84	70			15 012	66	67
	550	4	0.633	0.413	5 948	13	46	0.660	0.413	5 948	13	47	0.688	0.459	6 605	11	43
		6			8 922	29	57			8 922	30	57			9 908	24	54
		8			11 896	52	64			11 896	54	65			13 211	43	62
		10			14 870	81	70			14 870	84	70			16 513	66	67
	600	4	0.690	0.451	6 489	13	46	0.720	0.451	6 489	13	47	0.750	0.500	7 206	11	44
		6			9 733	29	57			9 733	30	57			10 809	24	54
		8			12 977	52	65			12 977	54	65			14 412	43	62
		10			16 222	81	70			16 222	84	71			18 014	66	68
	650	4	0.748	0.488	7 029	13	47	0.780	0.488	7 029	13	47	0.813	0.542	7 806	11	44
		6			10 544	29	57			10 544	30	58			11 709	24	55
		8			14 059	52	65			14 059	54	65			15 612	43	62
		10			17 573	81	71			17 573	84	71			19 516	66	68
	700	4	0.805	0.526	7 570	13	47	0.840	0.526	7 570	13	48	0.875	0.584	8 407	11	44
		6			11 355	29	58			11 355	30	58			12 610	24	55
		8			15 140	52	65			15 140	54	66			16 813	43	63
		10			18 925	81	71			18 925	84	71			21 017	66	68
	750	4	0.863	0.563	8 111	13	47	0.900	0.563	8 111	13	48	0.938	0.626	9 007	11	45
		6			12 166	29	58			12 166	30	58			13 511	24	55
		8			16 222	52	65			16 222	54	66			18 014	43	63
		10			20 277	81	71			20 277	84	72			22 518	66	69
	800	4	0.920	0.601	8 652	13	48	0.960	0.601	8 652	13	48	1.000	0.667	9 608	11	45
		6			12 977	29	58			12 977	30	59			14 412	24	56
		8			17 303	52	66			17 303	54	66			19 215	43	63
		10			21 629	81	72			21 629	84	72			24 019	66	69
	850	4	0.978	0.638	9 192	13	48	1.020	0.638	9 192	13	48	1.063	0.709	10 208	11	45
		6			13 788	29	59			13 788	30	59			15 312	24	56
		8			18 384	52	66			18 384	54	66			20 416	43	63
		10			22 981	81	72			22 981	84	72			25 520	66	69
	900	4	1.035	0.676	9 733	13	48	1.080	0.676	9 733	13	49	1.125	0.751	10 809	11	46
		6			14 599	29	59			14 599	30	59			16 213	24	56
		8			19 466	52	66			19 466	54	67			21 617	43	64
		10			24 332	81	72			24 332	84	73			27 022	66	69

The mcr WIP PRO fire damper selection program is available at **www.mercor.com.pl**, in the Designer Zone.

9.7. estimated weights of mcr WIP PRO/S dampers for rectangular ventilation ducts [kg]

		height H [mm]										
		270	300	400	500	600	700	800	900	1000	1100	1250
width B [mm]	110	3	3	4	5	7	8	9	10	11	13	14
	150	4	4	6	8	9	11	12	14	16	17	20
	200	5	6	8	10	12	15	17	19	21	23	27
	250	7	8	12	13	16	18	21	24	27	29	33
	300	8	9	12	16	19	22	25	29	32	35	40
	350	9	11	15	18	22	26	30	34	37	41	47
	400	11	12	17	21	25	30	34	38	43	47	54
	500	14	16	21	27	32	37	43	48	54	59	67
	600	16	19	25	32	38	45	51	58	64	71	81
	700	19	22	30	37	45	52	60	68	75	83	94
	800	22	25	34	43	51	60	69	77	86	95	108
	900	25	29	38	48	58	68	77	87	97	106	128

The table shows the weights of dampers with RST-KW1 trigger control mechanisms or actuators.

9.8. accessories

9.8.1. mcr KRP connection pipe

The mcr KRP connection pipes are used to connect a circular ventilation duct to a rectangular damper. The connection is a „bare end" pipe. The diameter of the pipe is 2 mm smaller than the diameter of the ventilation duct.

Dimensions:

BxH - damper dimensions [mm]

ØD - diameter of the connection duct [mm]

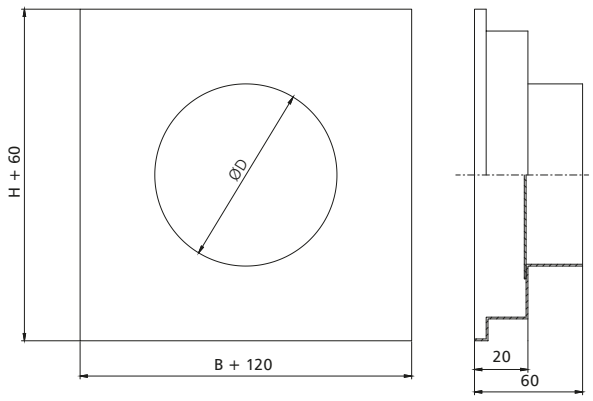

9.9. marking

mcr WIP PRO/S / B x H / 1 / 2 / 3

- 3 – parameters
- 2 – additional material
- 1 – control
- B x H – width x height (nominal)
- mcr WIP PRO/S – damper type

1 – control:

– RST-KW1 trigger control mechanism
RST-KW1/S – thermal trigger
RST-KW1/S/WK2 – thermal trigger + limit switch (open/closed blade signal)
RST-KW1/24I – thermal breaker + "pulse" type electromagnetic breaker, U = 24 V DC + limit switch (closed/open partition signalling)
RST-KW1/24P – thermal trigger + "break" type electromagnetic trigger, U = 24 V DC + limit switch (closed/open partition signalling)
RST-KW1/230I – thermal breaker + "pulse" type electromagnetic breaker, U = 230 V AC + limit switch (closed/open partition signalling)
RST-KW1/230P – thermal trigger + "break" type electromagnetic trigger, U = 230 V AC + limit switch (closed/open partition signalling)

– Belimo trigger control mechanism
BF24-T – actuator with a return spring, U = 24 V AC/DC
BF230-T – actuator with a return spring, U = 230 V AC
BF24TL-T-ST (with the BKN230-24MP option) – actuator with a return spring, U = 24 V, MP Bus digital control
EXBF24-T – explosion proof actuator with a return spring in the Ex version, U = 24 V AC/DC
EXBF230-T – explosion proof actuator with a return spring in the Ex version, U = 230 V AC
BF24-T-ST (with the BKN230-24 option) – actuator with a return spring, for the SBS Control system
BFL24-T – actuator with a return spring, U = 24 V AC/DC
BFL230-T – actuator with a return spring, U = 230 V AC
BFL24-T-ST (with the BKN230-24 option) – actuator with a return spring, for the SBS Control system
BFN24-T – actuator with a return spring, U = 24 V AC/DC
BFN230-T – actuator with a return spring, U = 230 V AC
BFN24-T-ST (with the BKN230-24 option) – actuator with a return spring, for the SBS Control system

2 – material:

[no symbol] – galvanised steel, Zn 275 g/m^2 coating
KN – stainless steel
KK – 1.4404 acid-proof steel

3 – additional parameters

Thermoelectric or thermal triggers
[no symbol] – trigger for 72°C
ZBAE95 – thermoelectric trigger for 95°C
ZBAT95 – thermoelectric trigger for 95°C
T93-95 – thermal trigger for 95°C

Axis of rotation of the damper
[no symbol] – horizontal axis of rotation
PP – vertical axis of rotation
PP_D – vertical axis of rotation - mechanism at the bottom of the damper
PP_G – vertical axis of rotation - mechanism at the top of the damper

Manufacture standard (see chapter 14.2 of this Catalogue)
[no symbol] – left damper
KP – right damper

Note: the additional parameters to be entered preceded by the "/" sign

example marking:

mcr WIP PRO/S 400 x 400 BFL24-T

Louvered fire damper EIS120 with a compact 24 V Belimo actuator with limit switches.

Chapter 13 - power supply and control (p. 203) contains:
- **technical specifications and connection diagrams for the trigger control mechanisms supporting the damper.**

Chapter 14 - additional information (p. 210) contains:
- **location of trigger control mechanisms in relation to the damper - production standards,**
- **table for quick selection of dampers, depending on fire separation and its thickness,**
- **installation distances: damper-ceiling, damper-wall, damper-damper.**

mcr WIP PRO/T multi-blade transfer fire dampers

PRODUCT CONFIGURATOR AND CAD MODELS/BIM AT WWW.MERCOR.COM.PL IN THE DESIGNER'S ZONE

BIM CAD

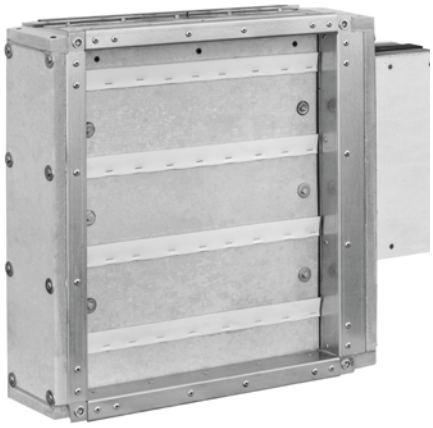

2434-CPR-0003

ATEST HIGIENICZNY

CTO S.A.

- EI120, EI180
- **Certificate of constancy of performance 2434-CPR-0003.**
- **Dampers qualified under EN 15650-3 and tested under EN 1366-2.**
- **Narrow louvered transfer dampers.**

10.1. application

The mcr WIP PRO/T transfer dampers are intended for installation in automatically operated fire ventilation systems. They are installed in fire walls without connecting ventilation ducts and retain their fire resistance during the fire. During normal operation, damper blades are open, what enables the supply of fresh air to escape routes, protecting them from smoke, or to the space, in which air exchange or supply through vertical construction partitions is required.

It is possible to use a closed transfer damper, in which the shutters open to transfer compensation air upon the receipt of an alarm signal from the fire signalling centre.

In the version designed for explosion hazard zones (EX version), the dampers can operate in gas explosion hazard zone 1 inside and outside ventilation ducts, and dust explosion hazard zone 21 outside these ducts. The dampers have been certified in compliance with the ATEX directive 94/9/EC and meet the requirements of group II category 2G and -/2D:

II 2G Ex h IIC T6 Gb
II -/2D Ex h IIIC T72° -/Db

Ambient temperature: Ta: -20°... +50°C

10.2. design

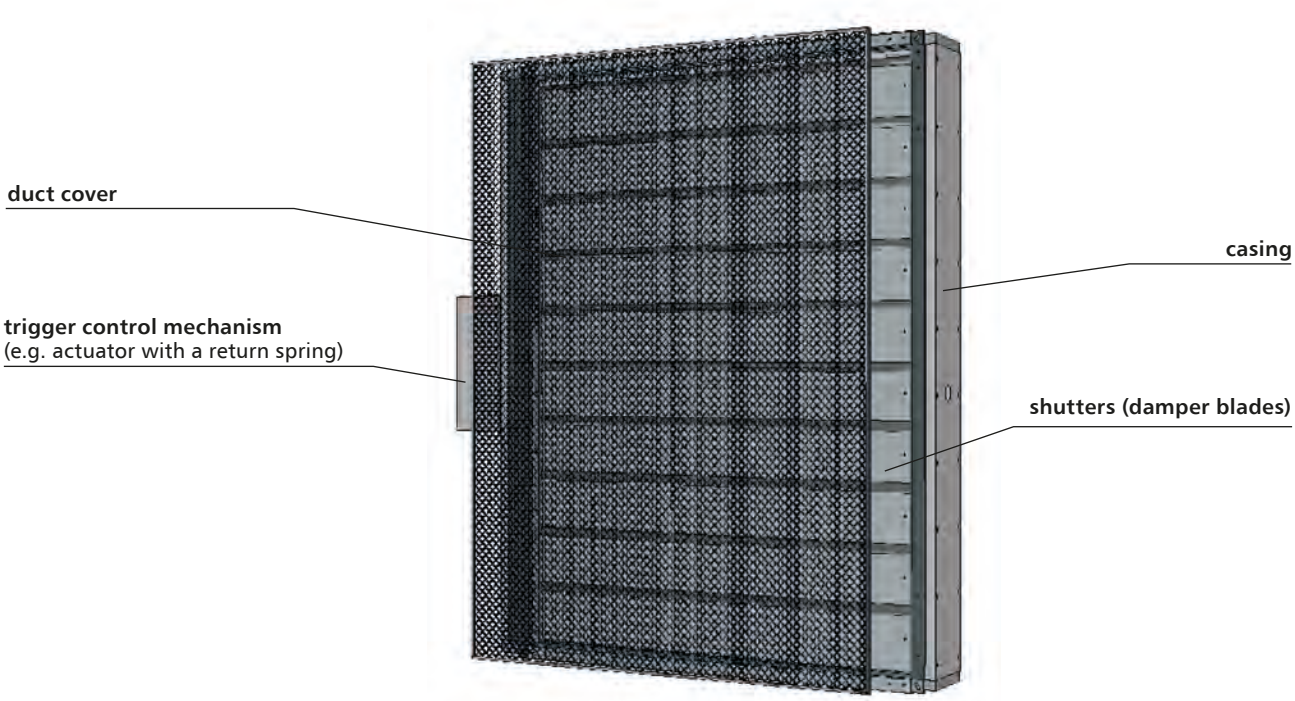

The mcr WIP PRO/T transfer damper consists of a rectangular casing made of two steel sections joined with a non-combustible plate using rivets and galvanized steel fasteners, a set of movable blades rotating around their axis and a trigger control mechanism. The fire damper casing is made of fire resistant panels and galvanized steel "C" shape profiles. The device is reinforced on both sides with steel corners. Intumescent and ventilation seals are installed on the inside. Each fire damper blade is made of two 20 mm thick fire resistant plates. Intumescent seal and ventilation seals fixed with staples are installed at the entire blade length. The blades rotate around the axis made by two steel pins. Each pin is mounted in a brass sleeve mounted on a vertical side H of the fire damper casing.

10.3. versions

10.3.1. mcr WIP PRO/T – the transfer fire damper with an axial actuator – damper closing and opening with an actuator

During normal operation, the shutters of the fire damper remain open or closed. In case of fire, the shutters shift or remain in standby.

The mcr WIP PRO/T dampers are equipped with a Belimo trigger control mechanisms **BFL**, **BFN**, **BF**, **BF-TL** and **EXBF** axial actuator with a return valve, powered with 24 V AC/DC or 230 V AC, with thermoelectric trigger 72°C (optionally it is possible to use triggers with the nominal tripping temperature of 95°C). BFL, BFN, BF series actuators are equipped with limit switches used to monitor the blades position. Furthermore, the mechanical position indicator is placed on the actuator.

Dampers with Belimo actuators: analogue BFL, BFN, BF, and digital BF-TL, EXBF explosion proof actuators close as a result of thermoelectric trigger tripping or power supply cut-off as a result of the actuator return spring action. The dampers open when the power supply voltage is applied to the actuator terminals. Furthermore, dampers with those actuators may be opened manually using a key.

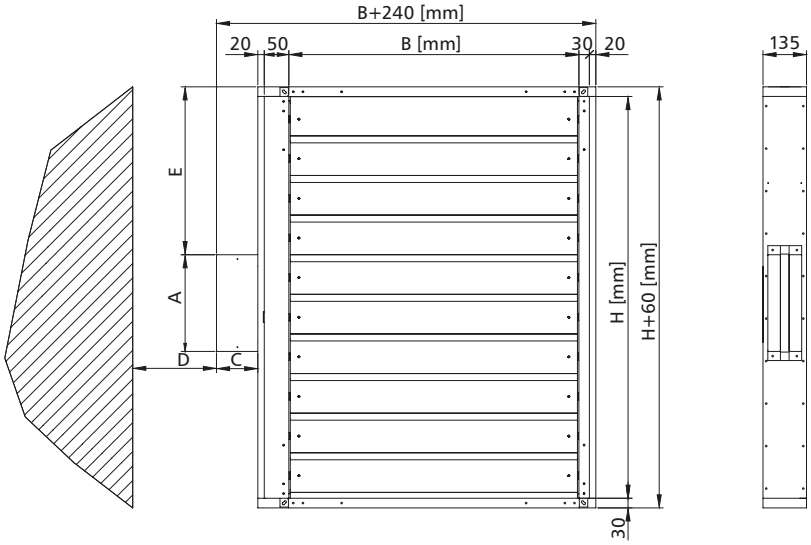

insert symmetrically in relation to the axis of the wall

mechanism	A	C	D	E
BF, BFL, BFN	298	120	75	formula
EXBF	400	175	75	formula

for the even number of blades	for the odd number of blades
E [mm] = (H/2 - 123) + 30	E [mm] = (H/2 - 61.5) + 30

Number of blades = H/123.

10.3.2. WIP PRO/T – the transfer fire damper with a spring drive and an integrated thermal trigger, optionally equipped with an electromagnetic trigger and limit switches

During normal operation, the cut-off shutters of the fire damper remain open. In case of fire, the shutters close automatically or, in case of a damper with an electromagnetic trigger, additionally using the fire automation.

The mcr WIP PRO/T dampers are equipped with a **RST-KW1** trigger control mechanism with a drive spring and a cam-lever system. A thermal trigger 74°C (optionally at 95°C) is integrated into the damper mechanism. After the nominal temperature is exceeded, the thermal trigger is tripped and the louvers close. On the RST-KW1 mechanism, there is a mechanical indicator of blades position. It is possible to equip a trigger control mechanism with an electromagnetic trigger activated by the application ("pulse") or removal ("break") of the power supply voltage and with limit switches used to signal the blades position state. The mechanism features test and blades button--release functions. Blades re-opening is activated manually.

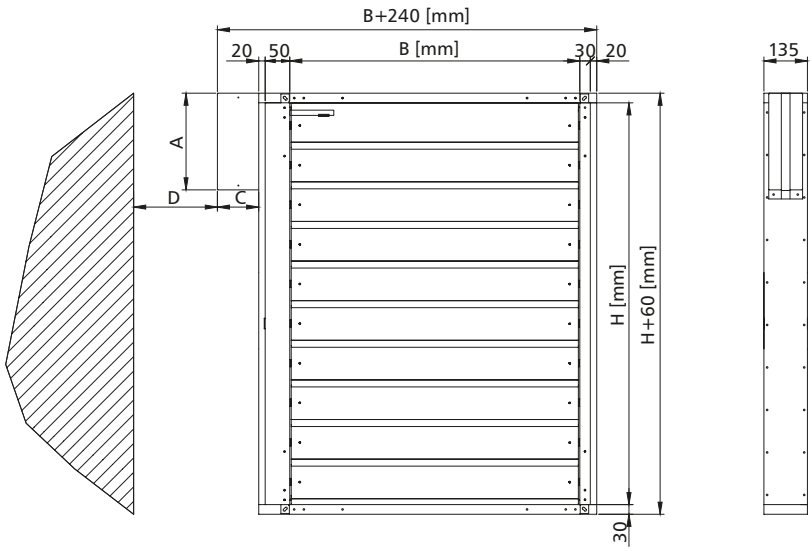

insert symmetrically in relation to the axis of the wall

mechanism	A	C	D
RST-KW1	298	120	75

10.4. dimensions

Rectangular dampers:

- nominal width B: from 110 mm to 900 mm
- nominal height H: from 270 mm to 1250 mm
- the maximum cross-section surface of one damper up to 1.125 m^2

Apart from the standard dimensions, fire dampers may be manufactured with intermediate dimensions (in 10 mm increments, in the given range).

Square fire dampers may also be fitted with round connectors for the spigot connection to the round ducts.

10.5. installation

Rectangular mcr WIP PRO/T fire dampers are class EI180(ve i↔o)-rated devices, when installed in a concrete partition, min. 120 mm thick, partitions made of fulll bricks or cellular concrete blocks, min. thickness 115 mm or lightweight walls with EI120 or higher fire rating.

10.5.1. preparation of installation openings

The minimum dimensions of the installation opening that permits correct installation of the mcr WIP PRO/T damper is:

Bo = (B + 240) + 40 mm
Ho = (H + 60) + 40 mm

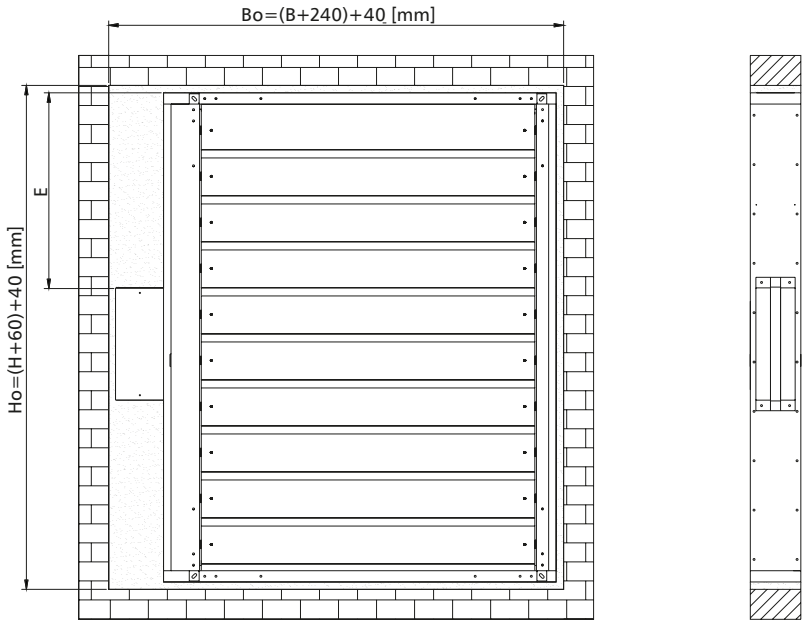

Dimension E (distance from the top fire damper edge to the edge of the trigger control mechanism box) - depending on the dimension H and the trigger control mechanism used.

mechanism	for the even number of blades	for the odd number of blades
BF, BFL, BFN	E [mm] = (H/2 - 123) + 30	E [mm] = (H/2 - 61.5) + 30
RST-KW1	E [mm] = 0	E [mm] = 0

10.5.2. sample installation in concrete block or full brick walls

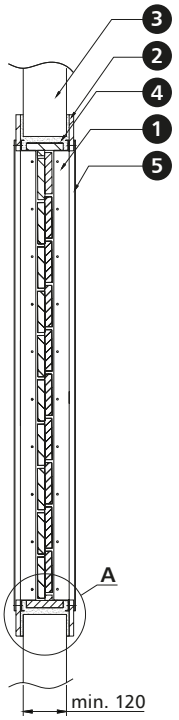

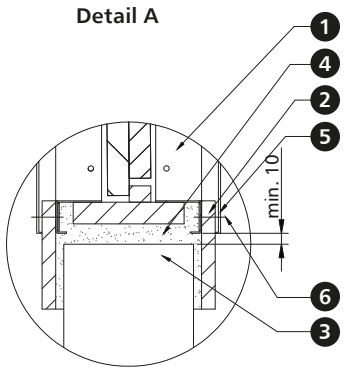

1. mcr WIP PRO fire damper
2. gypsum board trim 100x12.5 mm
3. brick masonry wall, min. 120 mm
4. cement mortar*
5. duct cover
6. M8 bolt

*it is possible to use a different sealing which ensures the required fire resistance

The thickness of the system duct cover is 5 mm. The duct cover can be made of galvanized steel or stainless steel and painted any RAL colour (standard RAL 9010).

10.5.3. sample installation in lightweight walls

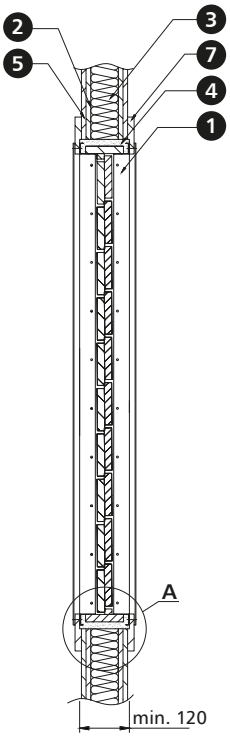

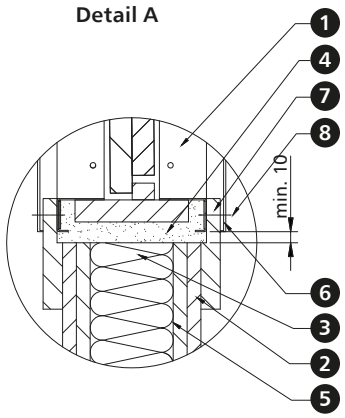

1. mcr WIP PRO fire damper
2. gypsum board 12.5mm
3. mineral wool
4. mortar (e.g. gypsum)*
5. structural profile
6. duct cover
7. gypsum board trim (GKF) 100x12.5 mm
8. M8 bolt

*it is possible to use a different sealing which ensures the required fire resistance

Fire damper installation with vertical rotation axis of the louvers

The fire damper can operate with a vertical axis of louver rotation with the top or bottom-mounted mechanism.

Distance between systems and partitions

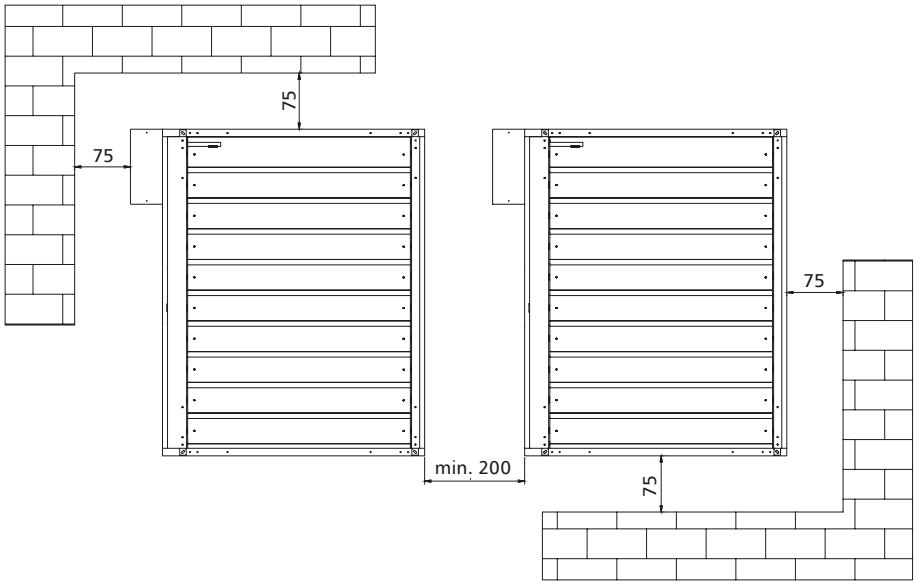

10.5.4. MWP system duct covers

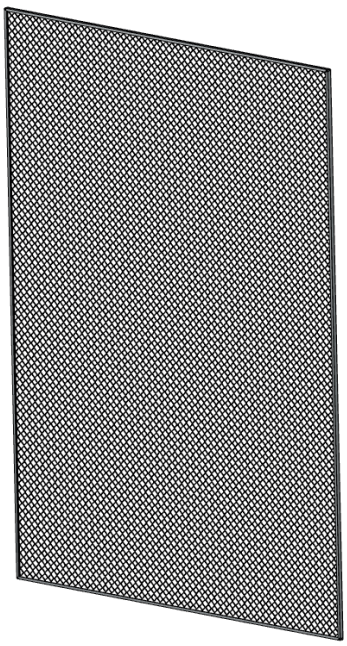

The MWP system duct covers are used for air supply or extraction. They enable the transfer of air through construction partitions. They come with a fixed steel mesh covering the visibility of the damper.

The casing of the duct cover is fixed to the damper with bolts. Such a solution allows for installing the product even in the most visually--demanding applications. The duct cover are painted in RAL 9010, as standard (available on request in any colour from the RAL range).

dimensions:

- nominal width B: from 110 to 900 mm
- nominal height H: from 263 to 1250 mm
- nominal thickness G: 5 mm

Apart from the standard dimensions there is a possibility to produce duct covers with intermediate dimensions.

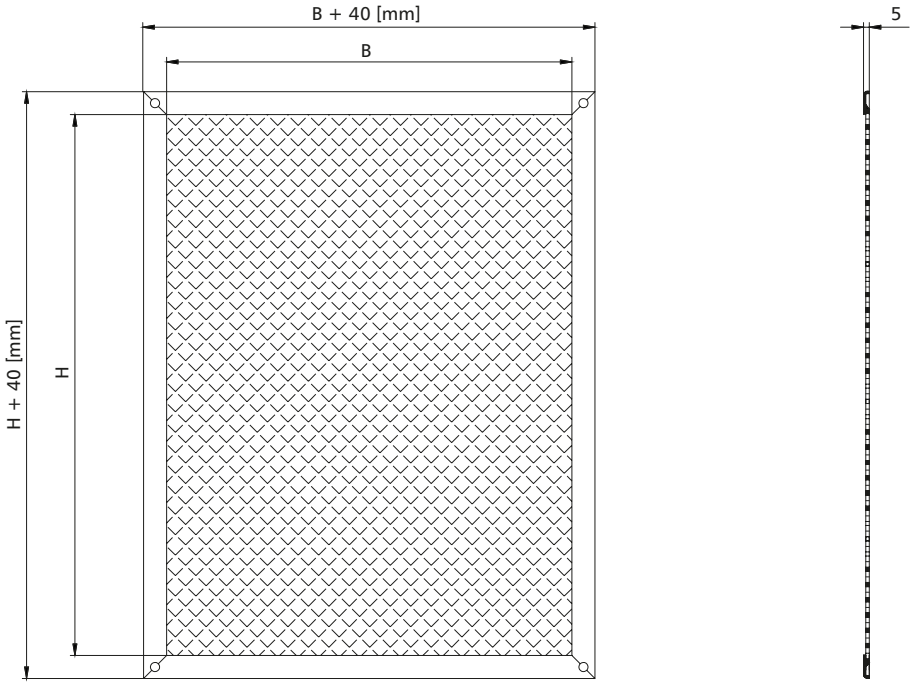

10.5.5. technical parameters of MWP duct covers

B – nominal width [mm]
H – nominal height [mm]
v – velocity [m/s]
Sk – duct cross-section [m²]
Se – duct cover active cross-section [m²]
Q – flow [m³/h]
dp – pressure drop [Pa]

			height H [mm]											
			200				300				400			
		v [m/s]	Sk [m²]	Se [m²]	Q [m³/h]	dp [Pa]	Sk [m²]	Se [m²]	Q [m³/h]	dp [Pa]	Sk [m²]	Se [m²]	Q [m³/h]	dp [Pa]
width B [mm]	200	4	0.040	0.028	409	8	0.060	0.043	613	8	0.080	0.057	818	8
		6			613	17			920	17			1 227	17
		8			818	31			1 227	31			1 636	31
		10			1 022	48			1 534	48			2 045	48
	300	4	0.060	0.043	613	8	0.090	0.064	920	8	0.120	0.085	1 227	8
		6			920	17			1 380	17			1 840	17
		8			1 227	31			1 840	31			2 454	31
		10			1 534	48			2 300	48			3 067	48
	400	4	0.080	0.057	818	8	0.120	0.085	1 227	8	0.160	0.114	1 636	8
		6			1 227	17			1 840	17			2 454	17
		8			1 636	31			2 454	31			3 272	31
		10			2 045	48			3 067	48			4 090	48
	500	4	0.100	0.071	1 022	8	0.150	0.107	1 534	8	0.200	0.142	2 045	8
		6			1 534	17			2 300	17			3 067	17
		8			2 045	31			3 067	31			4 090	31
		10			2 556	48			3 834	48			5 112	48
	600	4	0.120	0.085	1 227	8	0.180	0.128	1 840	8	0.240	0.170	2 454	8
		6			1 840	17			2 760	17			3 681	17
		8			2 454	31			3 681	31			4 908	31
		10			3 067	48			4 601	48			6 134	48
	700	4	0.140	0.099	1 431	8	0.210	0.149	2 147	8	0.280	0.199	2 863	8
		6			2 147	17			3 221	17			4 294	17
		8			2 863	31			4 294	31			5 725	31
		10			3 578	48			5 368	48			7 157	48
	800	4	0.160	0.114	1 636	8	0.240	0.170	2 454	8	0.320	0.227	3 272	8
		6			2 454	17			3 681	17			4 908	17
		8			3 272	31			4 908	31			6 543	31
		10			4 090	48			6 134	48			8 179	48
	900	4	0.180	0.128	1 840	8	0.270	0.192	2 760	8	0.360	0.256	3 681	8
		6			2 760	17			4 141	17			5 521	17
		8			3 681	31			5 521	31			7 361	31
		10			4 601	48			6 901	48			9 202	48

10.5.5. technical parameters of MWP duct covers

B – nominal width [mm]
H – nominal height [mm]
v – velocity [m/s]
Sk – duct cross-section [m²]
Se – duct cover active cross-section [m²]
Q – flow [m³/h]
dp – pressure drop [Pa]

			height H [mm]											
			500				600				700			
		v [m/s]	Sk [m²]	Se [m²]	Q [m³/h]	dp [Pa]	Sk [m²]	Se [m²]	Q [m³/h]	dp [Pa]	Sk [m²]	Se [m²]	Q [m³/h]	dp [Pa]
width B [mm]	200	4	0.100	0.071	1 022	8	0.120	0.085	1 227	8	0.140	0.099	1 431	8
		6			1 534	17			1 840	17			2 147	17
		8			2 045	31			2 454	31			2 863	31
		10			2 556	48			3 067	48			3 578	48
	300	4	0.150	0.107	1 534	8	0.180	0.128	1 840	8	0.210	0.149	2 147	8
		6			2 300	17			2 760	17			3 221	17
		8			3 067	31			3 681	31			4 294	31
		10			3 834	48			4 601	48			5 368	48
	400	4	0.200	0.142	2 045	8	0.240	0.170	2 454	8	0.280	0.199	2 863	8
		6			3 067	17			3 681	17			4 294	17
		8			4 090	31			4 908	31			5 725	31
		10			5 112	48			6 134	48			7 157	48
	500	4	0.250	0.178	2 556	8	0.300	0.213	3 067	8	0.350	0.249	3 578	8
		6			3 834	17			4 601	17			5 368	17
		8			5 112	31			6 134	31			7 157	31
		10			6 390	48			7 668	48			8 946	48
	600	4	0.300	0.213	3 067	8	0.360	0.256	3 681	8	0.420	0.298	4 294	8
		6			4 601	17			5 521	17			6 441	17
		8			6 134	31			7 361	31			8 588	31
		10			7 668	48			9 202	48			10 735	48
	700	4	0.350	0.249	3 578	8	0.420	0.298	4 294	8	0.490	0.348	5 010	8
		6			5 368	17			6 441	17			7 515	17
		8			7 157	31			8 588	31			10 020	31
		10			8 946	48			10 735	48			12 524	48
	800	4	0.400	0.284	4 090	8	0.480	0.341	4 908	8	0.560	0.398	5 725	8
		6			6 134	17			7 361	17			8 588	17
		8			8 179	31			9 815	31			11 451	31
		10			10 224	48			12 269	48			14 314	48
	900	4	0.450	0.320	4 601	8	0.540	0.383	5 521	8	0.630	0.447	6 441	8
		6			6 901	17			8 281	17			9 662	17
		8			9 202	31			11 042	31			12 882	31
		10			11 502	48			13 802	48			16 103	48

10.5.5. technical parameters of MWP duct covers

B – nominal width [mm]
H – nominal height [mm]
v – velocity [m/s]
Sk – duct cross-section [m²]
Se – duct cover active cross-section [m²]
Q – flow [m³/h]
dp – pressure drop [Pa]

			height H [mm]											
			800				900				1000			
		v [m/s]	Sk [m²]	Se [m²]	Q [m³/h]	dp [Pa]	Sk [m²]	Se [m²]	Q [m³/h]	dp [Pa]	Sk [m²]	Se [m²]	Q [m³/h]	dp [Pa]
width B [mm]	200	4	0.160	0.114	1 636	8	0.180	0.128	1 840	8	0.200	0.142	2 045	8
		6			2 454	17			2 760	17			3 067	17
		8			3 272	31			3 681	31			4 090	31
		10			4 090	48			4 601	48			5 112	48
	300	4	0.240	0.170	2 454	8	0.270	0.192	2 760	8	0.300	0.213	3 067	8
		6			3 681	17			4 141	17			4 601	17
		8			4 908	31			5 521	31			6 134	31
		10			6 134	48			6 901	48			7 668	48
	400	4	0.320	0.227	3 272	8	0.360	0.256	3 681	8	0.400	0.284	4 090	8
		6			4 908	17			5 521	17			6 134	17
		8			6 543	31			7 361	31			8 179	31
		10			8 179	48			9 202	48			10 224	48
	500	4	0.400	0.284	4 090	8	0.450	0.320	4 601	8	0.500	0.355	5 112	8
		6			6 134	17			6 901	17			7 668	17
		8			8 179	31			9 202	31			10 224	31
		10			10 224	48			11 502	48			12 780	48
	600	4	0.480	0.341	4 908	8	0.540	0.383	5 521	8	0.600	0.426	6 134	8
		6			7 361	17			8 281	17			9 202	17
		8			9 815	31			11 042	31			12 269	31
		10			12 269	48			13 802	48			15 336	48
	700	4	0.560	0.398	5 725	8	0.630	0.447	6 441	8	0.700	0.497	7 157	8
		6			8 588	17			9 662	17			10 735	17
		8			11 451	31			12 882	31			14 314	31
		10			14 314	48			16 103	48			17 892	48
	800	4	0.640	0.454	6 543	8	0.720	0.511	7 361	8	0.800	0.568	8 179	8
		6			9 815	17			11 042	17			12 269	17
		8			13 087	31			14 723	31			16 358	31
		10			16 358	48			18 403	48			20 448	48
	900	4	0.720	0.511	7 361	8	0.810	0.575	8 281	8	0.900	0.639	9 202	8
		6			11 042	17			12 422	17			13 802	17
		8			14 723	31			16 563	31			18 403	31
		10			18 403	48			20 704	48			23 004	48

10.5.5. technical parameters of MWP duct covers

B – nominal width [mm]
H – nominal height [mm]
v – velocity [m/s]
Sk – duct cross-section [m²]
Se – duct cover active cross-section [m²]
Q – flow [m³/h]
dp – pressure drop [Pa]

			height H [mm]				height H [mm]			
			1100				1250			
		v [m/s]	Sk [m²]	Se [m²]	Q [m³/h]	dp [Pa]	Sk [m²]	Se [m²]	Q [m³/h]	dp [Pa]
width B [mm]	200	4	0.220	0.156	2 249	8	0.250	0.178	2 556	8
		6			3 374	17			3 834	17
		8			4 499	31			5 112	31
		10			5 623	48			6 390	48
	300	4	0.330	0.234	3 374	8	0.375	0.266	3 834	8
		6			5 061	17			5 751	17
		8			6 748	31			7 668	31
		10			8 435	48			9 585	48
	400	4	0.440	0.312	4 499	8	0.500	0.355	5 112	8
		6			6 748	17			7 668	17
		8			8 997	31			10 224	31
		10			11 246	48			12 780	48
	500	4	0.550	0.391	5 623	8	0.625	0.444	6 390	8
		6			8 435	17			9 585	17
		8			11 246	31			12 780	31
		10			14 058	48			15 975	48
	600	4	0.660	0.469	6 748	8	0.750	0.533	7 668	8
		6			10 122	17			11 502	17
		8			13 496	31			15 336	31
		10			16 870	48			19 170	48
	700	4	0.770	0.547	7 872	8	0.875	0.621	8 946	8
		6			11 809	17			13 419	17
		8			15 745	31			17 892	31
		10			19 681	48			22 365	48
	800	4	0.880	0.625	8 997	8	1.000	0.710	10 224	8
		6			13 496	17			15 336	17
		8			17 994	31			20 448	31
		10			22 493	48			25 560	48
	900	4	0.990	0.703	10 122	8	1.125	0.799	11 502	8
		6			15 183	17			17 253	17
		8			20 244	31			23 004	31
		10			25 304	48			28 755	48

10.6. technical parameters of mcr WIP PRO/T rectangular dampers

B – nominal width [mm]
H – nominal height [mm]

v – velocity [m/s]
Sk – duct cross-section [m²]
Se – damper active cross-section [m²]

Q – flow [m³/h]
dp – pressure drop [Pa]
L_{WA} – damper noise level [dB]

			height H [mm]														
			270					300					350				
		v [m/s]	Sk [m²]	Se [m²]	Q [m³/h]	dp [Pa]	L_{WA} [dB]	Sk [m²]	Se [m²]	Q [m³/h]	dp [Pa]	L_{WA} [dB]	Sk [m²]	Se [m²]	Q [m³/h]	dp [Pa]	L_{WA} [dB]
width B [mm]	110	4	0.029	0.019	269	13	33	0.033	0.019	269	14	34	0.039	0.019	269	16	36
		6			404	28	43			404	30	44			404	36	46
		8			539	50	51			539	54	52			539	63	54
		10			673	78	57			673	85	58			673	99	60
	150	4	0.040	0.026	367	13	34	0.045	0.026	367	14	35	0.053	0.026	367	16	37
		6			551	28	45			551	30	46			551	36	48
		8			734	50	52			734	54	53			734	63	55
		10			918	78	58			918	85	59			918	99	61
	200	4	0.053	0.034	490	13	35	0.060	0.034	490	14	36	0.070	0.034	490	16	38
		6			734	28	46			734	30	47			734	36	49
		8			979	50	53			979	54	54			979	63	56
		10			1 224	78	59			1 224	84	60			1 224	99	62
	250	4	0.067	0.043	612	13	36	0.075	0.043	612	14	37	0.088	0.043	612	16	39
		6			918	28	47			918	30	48			918	36	50
		8			1 224	50	54			1 224	54	55			1 224	63	57
		10			1 530	78	60			1 530	85	61			1 530	99	63
	300	4	0.080	0.051	734	13	37	0.090	0.051	734	14	38	0.105	0.051	734	16	40
		6			1 102	28	48			1 102	30	49			1 102	36	51
		8			1 469	50	55			1 469	54	56			1 469	63	58
		10			1 836	78	61			1 836	85	62			1 836	99	64
	350	4	0.093	0.060	857	13	38	0.105	0.060	857	14	39	0.123	0.060	857	16	41
		6			1 285	28	48			1 285	30	49			1 285	36	51
		8			1 714	50	56			1 714	54	57			1 714	63	59
		10			2 142	78	62			2 142	85	63			2 142	99	65
	400	4	0.106	0.068	979	13	38	0.120	0.068	979	14	39	0.140	0.068	979	16	41
		6			1 469	28	49			1 469	30	50			1 469	36	52
		8			1 958	50	56			1 958	54	57			1 958	63	59
		10			2 448	78	62			2 448	84	63			2 448	99	65
	450	4	0.120	0.077	1 102	13	39	0.135	0.077	1 102	14	40	0.158	0.077	1 102	16	42
		6			1 652	28	49			1 652	30	50			1 652	36	52
		8			2 203	50	57			2 203	54	58			2 203	63	60
		10			2 754	78	63			2 754	84	64			2 754	99	66
	500	4	0.133	0.085	1 224	13	39	0.150	0.085	1 224	14	40	0.175	0.085	1 224	16	42
		6			1 836	28	50			1 836	30	51			1 836	36	53
		8			2 448	50	57			2 448	54	58			2 448	63	60
		10			3 060	78	63			3 060	85	64			3 060	99	66
	550	4	0.146	0.094	1 346	2	13	0.165	0.094	1 346	14	41	0.193	0.094	1 346	16	43
		6			2 020	4	23			2 020	30	51			2 020	36	53
		8			2 693	6	31			2 693	54	59			2 693	63	61
		10			3 366	10	36			3 366	84	65			3 366	99	67
	600	4	0.160	0.102	1 469	13	40	0.180	0.102	1 469	14	41	0.210	0.102	1 469	16	43
		6			2 203	28	51			2 203	30	52			2 203	36	54
		8			2 938	50	58			2 938	54	59			2 938	63	61
		10			3 672	78	64			3 672	85	65			3 672	99	67
	650	4	0.173	0.111	1 591	13	40	0.195	0.111	1 591	14	41	0.228	0.111	1 591	16	43
		6			2 387	28	51			2 387	30	52			2 387	36	54
		8			3 182	50	58			3 182	54	59			3 182	63	62
		10			3 978	78	64			3 978	85	65			3 978	99	67
	700	4	0.186	0.119	1 714	13	41	0.210	0.119	1 714	14	42	0.245	0.119	1 714	16	44
		6			2 570	28	51			2 570	30	52			2 570	36	54
		8			3 427	50	59			3 427	54	60			3 427	63	62
		10			4 284	78	65			4 284	85	66			4 284	99	68
	750	4	0.200	0.128	1 836	13	41	0.225	0.128	1 836	14	42	0.263	0.128	1 836	16	44
		6			2 754	28	52			2 754	30	53			2 754	36	55
		8			3 672	50	59			3 672	54	60			3 672	63	62
		10			4 590	78	65			4 590	85	66			4 590	99	68
	800	4	0.213	0.136	1 958	13	41	0.240	0.136	1 958	14	42	0.280	0.136	1 958	16	44
		6			2 938	28	52			2 938	30	53			2 938	36	55
		8			3 917	50	59			3 917	54	60			3 917	63	62
		10			4 896	78	65			4 896	84	66			4 896	99	68
	850	4	0.226	0.145	2 081	13	42	0.255	0.145	2 081	14	43	0.298	0.145	2 081	16	45
		6			3 121	28	52			3 121	30	53			3 121	36	55
		8			4 162	50	60			4 162	54	61			4 162	63	63
		10			5 202	78	65			5 202	84	66			5 202	99	68
	900	4	0.239	0.153	2 203	13	42	0.270	0.153	2 203	14	43	0.315	0.153	2 203	16	45
		6			3 305	28	52			3 305	30	53			3 305	36	55
		8			4 406	50	60			4 406	54	61			4 406	63	63
		10			5 508	78	66			5 508	84	67			5 508	99	69

10.6. technical parameters of mcr WIP PRO/T rectangular dampers

B – nominal width [mm]
H – nominal height [mm]

v – velocity [m/s]
Sk – duct cross-section [m²]
Se – damper active cross-section [m²]

Q – flow [m³/h]
dp – pressure drop [Pa]
L_{WA} – damper noise level [dB]

			height H [mm]														
			400					450					500				
		v [m/s]	Sk [m²]	Se [m²]	Q [m³/h]	dp [Pa]	L_{WA} [dB]	Sk [m²]	Se [m²]	Q [m³/h]	dp [Pa]	L_{WA} [dB]	Sk [m²]	Se [m²]	Q [m³/h]	dp [Pa]	L_{WA} [dB]
width B [mm]	110	4	0.044	0.028	401	13	35	0.050	0.028	401	14	36	0.056	0.037	532	11	34
		6			601	29	45			601	31	46			798	26	45
		8			802	52	53			802	55	54			1 064	45	52
		10			1 002	81	59			1 002	86	60			1 331	71	58
	150	4	0.060	0.038	546	13	36	0.068	0.038	546	14	37	0.077	0.050	726	11	36
		6			820	29	47			820	31	48			1 089	26	46
		8			1 093	52	54			1 093	55	55			1 452	45	54
		10			1 366	81	60			1 366	86	61			1 814	71	60
	200	4	0.080	0.051	729	13	37	0.090	0.051	729	14	38	0.102	0.067	968	11	37
		6			1 093	29	48			1 093	31	49			1 452	26	47
		8			1 457	52	55			1 457	55	56			1 935	45	55
		10			1 822	81	61			1 822	86	62			2 419	71	61
	250	4	0.100	0.063	911	13	38	0.113	0.063	911	14	39	0.128	0.084	1 210	11	38
		6			1 366	29	49			1 366	31	50			1 814	26	48
		8			1 822	52	56			1 822	55	57			2 419	45	56
		10			2 277	81	62			2 277	86	63			3 024	71	62
	300	4	0.120	0.076	1 093	13	39	0.135	0.076	1 093	14	40	0.154	0.101	1 452	11	39
		6			1 639	29	50			1 639	31	51			2 177	26	49
		8			2 186	52	57			2 186	55	58			2 903	45	57
		10			2 732	81	63			2 732	86	64			3 629	71	63
	350	4	0.140	0.089	1 275	13	40	0.158	0.089	1 275	14	41	0.179	0.118	1 693	11	39
		6			1 913	29	50			1 913	31	51			2 540	26	50
		8			2 550	52	58			2 550	55	59			3 387	45	57
		10			3 188	81	64			3 188	86	65			4 234	71	63
	400	4	0.160	0.101	1 457	13	40	0.180	0.101	1 457	14	41	0.205	0.134	1 935	11	40
		6			2 186	29	51			2 186	31	52			2 903	26	50
		8			2 915	52	58			2 915	55	59			3 871	45	58
		10			3 643	81	64			3 643	86	65			4 838	71	64
	450	4	0.180	0.114	1 639	13	41	0.203	0.114	1 639	14	42	0.230	0.151	2 177	11	40
		6			2 459	29	52			2 459	31	52			3 266	26	51
		8			3 279	52	59			3 279	55	60			4 355	45	59
		10			4 099	81	65			4 099	86	66			5 443	71	64
	500	4	0.200	0.127	1 822	13	41	0.225	0.127	1 822	14	42	0.256	0.168	2 419	11	41
		6			2 732	29	52			2 732	31	53			3 629	26	51
		8			3 643	52	59			3 643	55	60			4 838	45	59
		10			4 554	81	65			4 554	86	66			6 048	71	65
	550	4	0.220	0.139	2 004	13	42	0.248	0.139	2 004	14	43	0.282	0.185	2 661	11	41
		6			3 006	29	52			3 006	31	53			3 992	26	52
		8			4 008	52	60			4 008	55	61			5 322	45	59
		10			5 009	81	66			5 009	86	67			6 653	71	65
	600	4	0.240	0.152	2 186	13	42	0.270	0.152	2 186	14	43	0.307	0.202	2 903	11	42
		6			3 279	29	53			3 279	31	54			4 355	26	52
		8			4 372	52	60			4 372	55	61			5 806	45	60
		10			5 465	81	66			5 465	86	67			7 258	71	66
	650	4	0.260	0.164	2 368	13	43	0.293	0.164	2 368	14	43	0.333	0.218	3 145	11	42
		6			3 552	29	53			3 552	31	54			4 717	26	53
		8			4 736	52	61			4 736	55	61			6 290	45	60
		10			5 920	81	66			5 920	86	67			7 862	71	66
	700	4	0.280	0.177	2 550	13	43	0.315	0.177	2 550	14	44	0.358	0.235	3 387	11	42
		6			3 825	29	53			3 825	31	54			5 080	26	53
		8			5 100	52	61			5 100	55	62			6 774	45	60
		10			6 376	81	67			6 376	86	68			8 467	71	66
	750	4	0.300	0.190	2 732	13	43	0.338	0.190	2 732	14	44	0.384	0.252	3 629	11	43
		6			4 099	29	54			4 099	31	55			5 443	26	53
		8			5 465	52	61			5 465	55	62			7 258	45	61
		10			6 831	81	67			6 831	86	68			9 072	71	67
	800	4	0.320	0.202	2 915	13	43	0.360	0.202	2 915	14	43	0.410	0.269	3 871	11	43
		6			4 372	29	54			4 372	31	54			5 806	26	53
		8			5 829	52	62			5 829	55	61			7 741	45	61
		10			7 286	81	67			7 286	86	67			9 677	71	67
	850	4	0.340	0.215	3 097	13	44	0.383	0.215	3 097	14	43	0.435	0.286	4 113	11	43
		6			4 645	29	54			4 645	31	54			6 169	26	53
		8			6 193	52	62			6 193	55	61			8 225	45	61
		10			7 742	81	68			7 742	86	67			10 282	71	67
	900	4	0.360	0.228	3 279	13	44	0.405	0.228	3 279	14	43	0.461	0.302	4 355	11	43
		6			4 918	29	55			4 918	31	54			6 532	26	53
		8			6 558	52	62			6 558	55	61			8 709	45	61
		10			8 197	81	68			8 197	86	67			10 886	71	67

10.6. technical parameters of mcr WIP PRO/T rectangular dampers

B – nominal width [mm]
H – nominal height [mm]

v – velocity [m/s]
Sk – duct cross-section [m²]
Se – damper active cross-section [m²]

Q – flow [m³/h]
dp – pressure drop [Pa]
L_{WA} – damper noise level [dB]

			height H [mm]														
			550					630					650				
		v [m/s]	Sk [m²]	Se [m²]	Q [m³/h]	dp [Pa]	L_{WA} [dB]	Sk [m²]	Se [m²]	Q [m³/h]	dp [Pa]	L_{WA} [dB]	Sk [m²]	Se [m²]	Q [m³/h]	dp [Pa]	L_{WA} [dB]
width B [mm]	110	4	0.061	0.037	532	13	36	0.070	0.046	664	11	35	0.072	0.046	664	12	36
		6			798	29	46			996	25	46			996	27	47
		8			1 064	51	54			1 327	44	53			1 327	48	54
		10			1 331	79	60			1 659	69	59			1 659	76	60
	150	4	0.083	0.050	726	13	37	0.095	0.063	905	11	36	0.098	0.063	905	12	37
		6			1 089	29	48			1 358	25	47			1 358	27	48
		8			1 452	51	55			1 810	44	54			1 810	48	56
		10			1 814	79	61			2 263	69	60			2 263	76	61
	200	4	0.110	0.067	968	13	38	0.127	0.084	1 207	11	38	0.130	0.084	1 207	12	39
		6			1 452	29	49			1 810	25	48			1 810	27	49
		8			1 935	51	56			2 413	44	56			2 413	48	57
		10			2 419	79	62			3 017	69	61			3 017	76	63
	250	4	0.138	0.084	1 210	13	39	0.159	0.105	1 508	11	39	0.163	0.105	1 508	12	40
		6			1 814	29	50			2 263	25	49			2 263	27	50
		8			2 419	51	57			3 017	44	57			3 017	48	58
		10			3 024	79	63			3 771	69	62			3 771	76	64
	300	4	0.165	0.101	1 452	13	40	0.191	0.126	1 810	11	39	0.195	0.126	1 810	12	41
		6			2 177	29	51			2 715	25	50			2 715	27	51
		8			2 903	51	58			3 620	44	57			3 620	48	59
		10			3 629	79	64			4 525	69	63			4 525	76	64
	350	4	0.193	0.118	1 693	13	41	0.222	0.147	2 112	11	40	0.228	0.147	2 112	12	41
		6			2 540	29	51			3 168	25	51			3 168	27	52
		8			3 387	51	59			4 224	44	58			4 224	48	59
		10			4 234	79	65			5 279	69	64			5 279	76	65
	400	4	0.220	0.134	1 935	13	41	0.254	0.168	2 413	11	41	0.260	0.168	2 413	12	42
		6			2 903	29	52			3 620	25	51			3 620	27	52
		8			3 871	51	59			4 827	44	59			4 827	48	60
		10			4 838	79	65			6 034	69	64			6 034	76	66
	450	4	0.248	0.151	2 177	13	42	0.286	0.189	2 715	11	41	0.293	0.189	2 715	12	42
		6			3 266	29	52			4 073	25	52			4 073	27	53
		8			4 355	51	60			5 430	44	59			5 430	48	60
		10			5 443	79	66			6 788	69	65			6 788	76	66
	500	4	0.275	0.168	2 419	13	42	0.318	0.210	3 017	11	42	0.325	0.210	3 017	12	43
		6			3 629	29	53			4 525	25	52			4 525	27	53
		8			4 838	51	60			6 034	44	60			6 034	48	61
		10			6 048	79	66			7 542	69	65			7 542	76	67
	550	4	0.303	0.185	2 661	13	43	0.349	0.230	3 318	11	42	0.358	0.230	3 318	12	43
		6			3 992	29	53			4 978	25	53			4 978	27	54
		8			5 322	51	61			6 637	44	60			6 637	48	61
		10			6 653	79	67			8 296	69	66			8 296	76	67
	600	4	0.330	0.202	2 903	13	43	0.381	0.251	3 620	11	42	0.390	0.251	3 620	12	44
		6			4 355	29	54			5 430	25	53			5 430	27	54
		8			5 806	51	61			7 240	44	60			7 240	48	62
		10			7 258	79	67			9 050	69	66			9 050	76	67
	650	4	0.358	0.218	3 145	13	44	0.413	0.272	3 922	11	43	0.423	0.272	3 922	12	44
		6			4 717	29	54			5 883	25	53			5 883	27	54
		8			6 290	51	62			7 844	44	61			7 844	48	62
		10			7 862	79	67			9 805	69	67			9 805	76	68
	700	4	0.385	0.235	3 387	13	44	0.445	0.293	4 224	11	43	0.455	0.293	4 224	12	44
		6			5 080	29	54			6 335	25	54			6 335	27	55
		8			6 774	51	62			8 447	44	61			8 447	48	62
		10			8 467	79	68			10 559	69	67			10 559	76	68
	750	4	0.413	0.252	3 629	13	44	0.476	0.314	4 525	11	43	0.488	0.314	4 525	12	44
		6			5 443	29	55			6 788	25	54			6 788	27	55
		8			7 258	51	62			9 050	44	61			9 050	48	63
		10			9 072	79	68			11 313	69	67			11 313	76	68
	800	4	0.440	0.269	3 871	13	44	0.508	0.335	4 827	11	44	0.520	0.335	4 827	12	44
		6			5 806	29	55			7 240	25	54			7 240	27	55
		8			7 741	51	62			9 654	44	62			9 654	48	63
		10			9 677	79	68			12 067	69	67			12 067	76	68
	850	4	0.468	0.286	4 113	13	45	0.540	0.356	5 129	11	44	0.553	0.356	5 129	12	44
		6			6 169	29	55			7 693	25	54			7 693	27	55
		8			8 225	51	63			10 257	44	62			10 257	48	63
		10			10 282	79	69			12 821	69	68			12 821	76	68
	900	4	0.495	0.302	4 355	13	45	0.572	0.377	5 430	11	44	0.585	0.377	5 430	12	44
		6			6 532	29	56			8 145	25	52			8 145	27	55
		8			8 709	51	63			10 860	44	59			10 860	48	63
		10			10 886	79	69			13 576	69	65			13 576	76	68

10.6. technical parameters of mcr WIP PRO/T rectangular dampers

B – nominal width [mm]
H – nominal height [mm]

v – velocity [m/s]
Sk – duct cross-section [m²]
Se – damper active cross-section [m²]

Q – flow [m³/h]
dp – pressure drop [Pa]
L_{WA} – damper noise level [dB]

			height H [mm]														
			700					750					800				
		v [m/s]	Sk [m²]	Se [m²]	Q [m³/h]	dp [Pa]	L_{WA} [dB]	Sk [m²]	Se [m²]	Q [m³/h]	dp [Pa]	L_{WA} [dB]	Sk [m²]	Se [m²]	Q [m³/h]	dp [Pa]	L_{WA} [dB]
width B [mm]	110	4	0.077	0.046	664	14	38	0.083	0.060	859	9	33	0.088	0.055	795	10	34
		6			996	30	48			1 288	20	44			1 193	22	45
		8			1 327	54	56			1 717	35	51			1 590	40	52
		10			1 659	85	61			2 146	55	57			1 988	62	58
	150	4	0.105	0.063	905	14	39	0.114	0.081	1 171	9	34	0.120	0.075	1 084	10	36
		6			1 358	30	49			1 756	20	45			1 626	22	46
		8			1 810	54	57			2 341	35	52			2 169	40	54
		10			2 263	85	63			2 927	55	58			2 711	62	60
	200	4	0.140	0.084	1 207	14	40	0.152	0.108	1 561	9	36	0.160	0.100	1 446	10	37
		6			1 810	30	51			2 341	20	46			2 169	22	48
		8			2 413	54	58			3 122	35	54			2 892	40	55
		10			3 017	85	64			3 902	55	60			3 614	62	61
	250	4	0.175	0.105	1 508	14	41	0.190	0.136	1 951	9	37	0.200	0.126	1 807	10	38
		6			2 263	30	52			2 927	20	47			2 711	22	49
		8			3 017	54	59			3 902	35	55			3 614	40	56
		10			3 771	85	65			4 878	55	60			4 518	62	62
	300	4	0.210	0.126	1 810	14	42	0.227	0.163	2 341	9	37	0.240	0.151	2 169	10	39
		6			2 715	30	53			3 512	20	48			3 253	22	49
		8			3 620	54	60			4 683	35	55			4 337	40	57
		10			4 525	85	66			5 854	55	61			5 422	62	63
	350	4	0.245	0.147	2 112	14	43	0.265	0.190	2 732	9	38	0.280	0.176	2 530	10	39
		6			3 168	30	53			4 098	20	49			3 795	22	50
		8			4 224	54	61			5 463	35	56			5 060	40	57
		10			5 279	85	66			6 829	55	62			6 325	62	63
	400	4	0.280	0.168	2 413	14	43	0.303	0.217	3 122	9	39	0.320	0.201	2 892	10	40
		6			3 620	30	54			4 683	20	49			4 337	22	51
		8			4 827	54	61			6 244	35	57			5 783	40	58
		10			6 034	85	67			7 805	55	63			7 229	62	64
	450	4	0.315	0.189	2 715	14	44	0.341	0.244	3 512	9	39	0.360	0.226	3 253	10	41
		6			4 073	30	54			5 268	20	50			4 879	22	51
		8			5 430	54	62			7 024	35	57			6 506	40	59
		10			6 788	85	68			8 780	55	63			8 132	62	64
	500	4	0.350	0.210	3 017	14	44	0.379	0.271	3 902	9	40	0.400	0.251	3 614	10	41
		6			4 525	30	55			5 854	20	50			5 422	22	52
		8			6 034	54	62			7 805	35	58			7 229	40	59
		10			7 542	85	68			9 756	55	63			9 036	62	65
	550	4	0.385	0.230	3 318	14	45	0.417	0.298	4 293	9	40	0.440	0.276	3 976	10	41
		6			4 978	30	55			6 439	20	51			5 964	22	52
		8			6 637	54	63			8 585	35	58			7 952	40	59
		10			8 296	85	68			10 732	55	64			9 940	62	65
	600	4	0.420	0.251	3 620	14	45	0.455	0.325	4 683	9	40	0.480	0.301	4 337	10	42
		6			5 430	30	56			7 024	20	51			6 506	22	52
		8			7 240	54	63			9 366	35	58			8 675	40	60
		10			9 050	85	69			11 707	55	64			10 843	62	66
	650	4	0.455	0.272	3 922	14	45	0.493	0.352	5 073	9	41	0.520	0.326	4 699	10	42
		6			5 883	30	56			7 610	20	51			7 048	22	53
		8			7 844	54	63			10 146	35	59			9 397	40	60
		10			9 805	85	69			12 683	55	65			11 747	62	66
	700	4	0.490	0.293	4 224	14	46	0.531	0.379	5 463	9	41	0.560	0.351	5 060	10	42
		6			6 335	30	56			8 195	20	52			7 590	22	53
		8			8 447	54	64			10 927	35	59			10 120	40	61
		10			10 559	85	69			13 658	55	65			12 650	62	66
	750	4	0.525	0.314	4 525	14	46	0.569	0.407	5 854	9	41	0.600	0.377	5 422	10	43
		6			6 788	30	56			8 780	20	52			8 132	22	53
		8			9 050	54	64			11 707	35	59			10 843	40	61
		10			11 313	85	70			14 634	55	65			13 554	62	67
	800	4	0.560	0.335	4 827	14	44	0.606	0.434	6 244	9	42	0.640	0.402	5 783	10	43
		6			7 240	30	55			9 366	20	52			8 675	22	54
		8			9 654	54	62			12 488	35	60			11 566	40	61
		10			12 067	85	67			15 610	55	66			14 458	62	67
	850	4	0.595	0.356	5 129	14	46	0.644	0.461	6 634	9	42	0.680	0.427	6 144	10	43
		6			7 693	30	57			9 951	20	52			9 217	22	54
		8			10 257	54	65			13 268	35	60			12 289	40	61
		10			12 821	85	70			16 585	55	66			15 361	62	67
	900	4	0.630	0.377	5 430	14	47	0.682	0.488	7 024	9	42	0.720	0.452	6 506	10	44
		6			8 145	30	57			10 536	20	53			9 759	22	54
		8			10 860	54	65			14 049	35	60			13 012	40	62
		10			13 576	85	71			17 561	55	66			16 265	62	67

10.6. technical parameters of mcr WIP PRO/T rectangular dampers

B – nominal width [mm]
H – nominal height [mm]

v – velocity [m/s]
Sk – duct cross-section [m^2]
Se – damper active cross-section [m^2]

Q – flow [m^3/h]
dp – pressure drop [Pa]
L_{WA} – damper noise level [dB]

			height H [mm]														
			850					900					950				
		v [m/s]	Sk [m^2]	Se [m^2]	Q [m^3/h]	dp [Pa]	L_{WA} [dB]	Sk [m^2]	Se [m^2]	Q [m^3/h]	dp [Pa]	L_{WA} [dB]	Sk [m^2]	Se [m^2]	Q [m^3/h]	dp [Pa]	L_{WA} [dB]
width B [mm]	110	4	0.097	0.064	927	12	38	0.099	0.064	927	13	39	0.105	0.064	927	14	40
		6			1 390	27	48			1 390	30	49			1 390	32	50
		8			1 853	49	56			1 853	53	57			1 853	57	58
		10			2 317	76	62			2 317	83	63			2 317	89	64
	150	4	0.132	0.088	1 264	12	39	0.135	0.088	1 264	13	40	0.143	0.088	1 264	14	41
		6			1 895	27	50			1 895	30	51			1 895	32	52
		8			2 527	49	57			2 527	53	58			2 527	57	59
		10			3 159	76	63			3 159	83	64			3 159	89	65
	200	4	0.176	0.117	1 685	12	40	0.180	0.117	1 685	13	41	0.190	0.117	1 685	14	42
		6			2 527	27	51			2 527	30	52			2 527	32	53
		8			3 370	49	58			3 370	53	59			3 370	57	60
		10			4 212	76	64			4 212	83	65			4 212	89	66
	250	4	0.220	0.146	2 106	12	41	0.225	0.146	2 106	13	42	0.238	0.146	2 106	14	43
		6			3 159	27	52			3 159	30	53			3 159	32	54
		8			4 212	49	59			4 212	53	60			4 212	57	61
		10			5 265	76	65			5 265	83	66			5 265	89	67
	300	4	0.264	0.176	2 527	12	42	0.270	0.176	2 527	13	43	0.285	0.176	2 527	14	44
		6			3 791	27	53			3 791	30	54			3 791	32	55
		8			5 054	49	60			5 054	53	61			5 054	57	62
		10			6 318	76	66			6 318	83	67			6 318	89	68
	350	4	0.308	0.205	2 948	12	43	0.315	0.205	2 948	13	44	0.333	0.205	2 948	14	45
		6			4 423	27	53			4 423	30	54			4 423	32	55
		8			5 897	49	61			5 897	53	62			5 897	57	63
		10			7 371	76	67			7 371	83	68			7 371	89	69
	400	4	0.352	0.234	3 370	12	43	0.360	0.234	3 370	13	44	0.380	0.234	3 370	14	45
		6			5 054	27	54			5 054	30	55			5 054	32	56
		8			6 739	49	61			6 739	53	62			6 739	57	63
		10			8 424	76	67			8 424	83	68			8 424	89	69
	450	4	0.396	0.263	3 791	12	44	0.405	0.263	3 791	13	45	0.428	0.263	3 791	14	46
		6			5 686	27	54			5 686	30	55			5 686	32	56
		8			7 582	49	62			7 582	53	63			7 582	57	64
		10			9 477	76	68			9 477	83	69			9 477	89	70
	500	4	0.441	0.293	4 212	12	44	0.450	0.293	4 212	13	45	0.475	0.293	4 212	14	46
		6			6 318	27	55			6 318	30	56			6 318	32	57
		8			8 424	49	62			8 424	53	63			8 424	57	64
		10			10 530	76	68			10 530	83	69			10 530	89	70
	550	4	0.485	0.322	4 633	12	45	0.495	0.322	4 633	13	46	0.523	0.322	4 633	14	47
		6			6 950	27	55			6 950	30	56			6 950	32	57
		8			9 266	49	63			9 266	53	64			9 266	57	65
		10			11 583	76	69			11 583	83	70			11 583	89	70
	600	4	0.529	0.351	5 054	12	45	0.540	0.351	5 054	13	46	0.570	0.351	5 054	14	47
		6			7 582	27	56			7 582	30	57			7 582	32	58
		8			10 109	49	63			10 109	53	64			10 109	57	65
		10			12 636	76	69			12 636	83	70			12 636	89	71
	650	4	0.573	0.380	5 476	12	45	0.585	0.380	5 476	13	46	0.618	0.380	5 476	14	47
		6			8 213	27	56			8 213	30	57			8 213	32	58
		8			10 951	49	63			10 951	53	65			10 951	57	65
		10			13 689	76	69			13 689	83	70			13 689	89	71
	700	4	0.617	0.410	5 897	12	46	0.630	0.410	5 897	13	47	0.665	0.410	5 897	14	48
		6			8 845	27	56			8 845	30	57			8 845	32	58
		8			11 794	49	64			11 794	53	65			11 794	57	66
		10			14 742	76	70			14 742	83	71			14 742	89	72
	750	4	0.661	0.439	6 318	12	46	0.675	0.439	6 318	13	47	0.713	0.439	6 318	14	48
		6			9 477	27	57			9 477	30	58			9 477	32	59
		8			12 636	49	64			12 636	53	65			12 636	57	66
		10			15 795	76	70			15 795	83	71			15 795	89	72
	800	4	0.705	0.468	6 739	12	46	0.720	0.468	6 739	13	47	0.760	0.468	6 739	14	48
		6			10 109	27	57			10 109	30	58			10 109	32	59
		8			13 478	49	64			13 478	53	65			13 478	57	66
		10			16 848	76	70			16 848	83	71			16 848	89	72
	850	4	0.749	0.497	7 160	12	47	0.765	0.497	7 160	13	48	0.808	0.497	7 160	14	49
		6			10 741	27	57			10 741	30	58			10 741	32	59
		8			14 321	49	65			14 321	53	66			14 321	57	67
		10			17 901	76	70			17 901	83	71			17 901	89	72
	900	4	0.793	0.527	7 582	12	47	0.810	0.527	7 582	13	48	0.855	0.527	7 582	14	49
		6			11 372	27	57			11 372	30	58			11 372	32	59
		8			15 163	49	65			15 163	53	66			15 163	57	67
		10			18 954	76	71			18 954	83	72			18 954	89	73

10.6. technical parameters of mcr WIP PRO/T rectangular dampers

B – nominal width [mm]
H – nominal height [mm]

v – velocity [m/s]
Sk – duct cross-section [m²]
Se – damper active cross-section [m²]

Q – flow [m³/h]
dp – pressure drop [Pa]
L_{WA} – damper noise level [dB]

			height H [mm]														
			1000					1050					1100				
		v [m/s]	Sk [m²]	Se [m²]	Q [m³/h]	dp [Pa]	L_{WA} [dB]	Sk [m²]	Se [m²]	Q [m³/h]	dp [Pa]	L_{WA} [dB]	Sk [m²]	Se [m²]	Q [m³/h]	dp [Pa]	L_{WA} [dB]
width B [mm]	110	4	0.110	0.073	1 058	12	38	0.116	0.073	1 058	13	39	0.124	0.083	1 190	11	37
		6			1 587	27	49			1 587	29	49			1 784	24	48
		8			2 116	48	56			2 116	51	57			2 379	43	55
		10			2 645	76	62			2 645	79	63			2 974	67	61
	150	4	0.151	0.100	1 443	12	39	0.158	0.100	1 443	13	40	0.169	0.113	1 622	11	38
		6			2 164	27	50			2 164	29	51			2 433	24	49
		8			2 886	48	58			2 886	51	58			3 244	43	56
		10			3 607	76	63			3 607	79	64			4 055	67	62
	200	4	0.201	0.134	1 924	12	41	0.210	0.134	1 924	13	41	0.225	0.150	2 163	11	39
		6			2 886	27	51			2 886	29	52			3 244	24	50
		8			3 848	48	59			3 848	51	59			4 326	43	57
		10			4 810	76	65			4 810	79	65			5 407	67	63
	250	4	0.251	0.167	2 405	12	42	0.263	0.167	2 405	13	42	0.282	0.188	2 704	11	40
		6			3 607	27	52			3 607	29	53			4 055	24	51
		8			4 810	48	60			4 810	51	60			5 407	43	58
		10			6 012	76	66			6 012	79	66			6 759	67	64
	300	4	0.301	0.200	2 886	12	42	0.315	0.200	2 886	13	43	0.338	0.225	3 244	11	41
		6			4 329	27	53			4 329	29	54			4 866	24	51
		8			5 772	48	61			5 772	51	61			6 489	43	59
		10			7 214	76	66			7 214	79	67			8 111	67	65
	350	4	0.351	0.234	3 367	12	43	0.368	0.234	3 367	13	44	0.394	0.263	3 785	11	42
		6			5 050	27	54			5 050	29	54			5 678	24	52
		8			6 733	48	61			6 733	51	62			7 570	43	60
		10			8 417	76	67			8 417	79	68			9 463	67	65
	400	4	0.402	0.267	3 848	12	44	0.420	0.267	3 848	13	44	0.451	0.300	4 326	11	42
		6			5 772	27	54			5 772	29	55			6 489	24	53
		8			7 695	48	62			7 695	51	62			8 652	43	60
		10			9 619	76	68			9 619	79	68			10 814	67	66
	450	4	0.452	0.301	4 329	12	44	0.473	0.301	4 329	13	45	0.507	0.338	4 866	11	43
		6			6 493	27	55			6 493	29	55			7 300	24	53
		8			8 657	48	62			8 657	51	63			9 733	43	61
		10			10 822	76	68			10 822	79	69			12 166	67	67
	500	4	0.502	0.334	4 810	12	45	0.525	0.334	4 810	13	45	0.564	0.376	5 407	11	43
		6			7 214	27	55			7 214	29	56			8 111	24	54
		8			9 619	48	63			9 619	51	63			10 814	43	61
		10			12 024	76	69			12 024	79	69			13 518	67	67
	550	4	0.552	0.367	5 291	12	45	0.578	0.367	5 291	13	46	0.620	0.413	5 948	11	44
		6			7 936	27	56			7 936	29	56			8 922	24	54
		8			10 581	48	63			10 581	51	64			11 896	43	62
		10			13 226	76	69			13 226	79	70			14 870	67	67
	600	4	0.602	0.401	5 772	12	46	0.630	0.401	5 772	13	46	0.676	0.451	6 489	11	44
		6			8 657	27	56			8 657	29	57			9 733	24	54
		8			11 543	48	64			11 543	51	64			12 977	43	62
		10			14 429	76	69			14 429	79	70			16 222	67	68
	650	4	0.653	0.434	6 252	12	46	0.683	0.434	6 252	13	46	0.733	0.488	7 029	11	44
		6			9 379	27	56			9 379	29	57			10 544	24	55
		8			12 505	48	64			12 505	51	65			14 059	43	62
		10			15 631	76	70			15 631	79	70			17 573	67	68
	700	4	0.703	0.468	6 733	12	46	0.735	0.468	6 733	13	47	0.789	0.526	7 570	11	45
		6			10 100	27	57			10 100	29	57			11 355	24	55
		8			13 467	48	64			13 467	51	65			15 140	43	63
		10			16 834	76	70			16 834	79	71			18 925	67	68
	750	4	0.753	0.501	7 214	12	46	0.788	0.501	7 214	13	47	0.845	0.563	8 111	11	45
		6			10 822	27	57			10 822	29	58			12 166	24	55
		8			14 429	48	65			14 429	51	65			16 222	43	63
		10			18 036	76	70			18 036	79	71			20 277	67	69
	800	4	0.803	0.534	7 695	12	47	0.840	0.534	7 695	13	47	0.902	0.601	8 652	11	45
		6			11 543	27	57			11 543	29	58			12 977	24	56
		8			15 391	48	65			15 391	51	65			17 303	43	63
		10			19 238	76	71			19 238	79	71			21 629	67	69
	850	4	0.853	0.568	8 176	12	47	0.893	0.568	8 176	13	48	0.958	0.638	9 192	11	45
		6			12 264	27	58			12 264	29	58			13 788	24	56
		8			16 353	48	65			16 353	51	66			18 384	43	63
		10			20 441	76	71			20 441	79	72			22 981	67	69
	900	4	0.904	0.601	8 657	12	47	0.945	0.601	8 657	13	48	1.014	0.676	9 733	11	46
		6			12 986	27	58			12 986	29	58			14 599	24	56
		8			17 315	48	65			17 315	51	66			19 466	43	64
		10			21 643	76	71			21 643	79	72			24 332	67	70

10.6. technical parameters of mcr WIP PRO/T rectangular dampers

B – nominal width [mm]
H – nominal height [mm]

v – velocity [m/s]
Sk – duct cross-section [m²]
Se – damper active cross-section [m²]

Q – flow [m³/h]
dp – pressure drop [Pa]
L_{WA} – damper noise level [dB]

			height H [mm]														
			1150					1200					1250				
width B [mm]		v [m/s]	Sk [m²]	Se [m²]	Q [m³/h]	dp [Pa]	L_{WA} [dB]	Sk [m²]	Se [m²]	Q [m³/h]	dp [Pa]	L_{WA} [dB]	Sk [m²]	Se [m²]	Q [m³/h]	dp [Pa]	L_{WA} [dB]
	110	4	0.127	0.083	1 190	13	40	0.132	0.083	1 190	13	40	0.138	0.092	1 321	11	37
		6			1 784	29	50			1 784	30	51			1 982	24	48
		8			2 379	52	58			2 379	54	58			2 642	43	55
		10			2 974	81	63			2 974	84	64			3 303	66	61
	150	4	0.173	0.113	1 622	13	41	0.180	0.113	1 622	13	41	0.188	0.125	1 801	11	39
		6			2 433	29	52			2 433	30	52			2 702	24	49
		8			3 244	52	59			3 244	54	59			3 603	43	57
		10			4 055	81	65			4 055	84	65			4 504	66	63
	200	4	0.230	0.150	2 163	13	42	0.240	0.150	2 163	13	42	0.250	0.167	2 402	11	39
		6			3 244	29	52			3 244	30	53			3 603	24	50
		8			4 326	52	60			4 326	54	60			4 804	43	57
		10			5 407	81	66			5 407	84	66			6 005	66	63
	250	4	0.288	0.188	2 704	13	43	0.300	0.188	2 704	13	43	0.313	0.209	3 002	11	40
		6			4 055	29	53			4 055	30	54			4 504	24	51
		8			5 407	52	61			5 407	54	61			6 005	43	58
		10			6 759	81	67			6 759	84	67			7 506	66	64
	300	4	0.345	0.225	3 244	13	43	0.360	0.225	3 244	13	44	0.375	0.250	3 603	11	41
		6			4 866	29	54			4 866	30	54			5 404	24	51
		8			6 489	52	61			6 489	54	62			7 206	43	59
		10			8 111	81	67			8 111	84	68			9 007	66	65
	350	4	0.403	0.263	3 785	13	44	0.420	0.263	3 785	13	45	0.438	0.292	4 203	11	41
		6			5 678	29	55			5 678	30	55			6 305	24	52
		8			7 570	52	62			7 570	54	63			8 407	43	60
		10			9 463	81	68			9 463	84	68			10 508	66	65
	400	4	0.460	0.300	4 326	13	45	0.480	0.300	4 326	13	45	0.500	0.334	4 804	11	42
		6			6 489	29	55			6 489	30	56			7 206	24	53
		8			8 652	52	63			8 652	54	63			9 608	43	60
		10			10 814	81	69			10 814	84	69			12 010	66	66
	450	4	0.518	0.338	4 866	13	45	0.540	0.338	4 866	13	46	0.563	0.375	5 404	11	43
		6			7 300	29	56			7 300	30	56			8 106	24	53
		8			9 733	52	63			9 733	54	64			10 809	43	61
		10			12 166	81	69			12 166	84	70			13 511	66	66
	500	4	0.575	0.376	5 407	13	46	0.600	0.376	5 407	13	46	0.625	0.417	6 005	11	43
		6			8 111	29	56			8 111	30	57			9 007	24	54
		8			10 814	52	64			10 814	54	64			12 010	43	61
		10			13 518	81	70			13 518	84	70			15 012	66	67
	550	4	0.633	0.413	5 948	13	46	0.660	0.413	5 948	13	47	0.688	0.459	6 605	11	43
		6			8 922	29	57			8 922	30	57			9 908	24	54
		8			11 896	52	64			11 896	54	65			13 211	43	62
		10			14 870	81	70			14 870	84	70			16 513	66	67
	600	4	0.690	0.451	6 489	13	46	0.720	0.451	6 489	13	47	0.750	0.500	7 206	11	44
		6			9 733	29	57			9 733	30	57			10 809	24	54
		8			12 977	52	65			12 977	54	65			14 412	43	62
		10			16 222	81	70			16 222	84	71			18 014	66	68
	650	4	0.748	0.488	7 029	13	47	0.780	0.488	7 029	13	47	0.813	0.542	7 806	11	44
		6			10 544	29	57			10 544	30	58			11 709	24	55
		8			14 059	52	65			14 059	54	65			15 612	43	62
		10			17 573	81	71			17 573	84	71			19 516	66	68
	700	4	0.805	0.526	7 570	13	47	0.840	0.526	7 570	13	48	0.875	0.584	8 407	11	44
		6			11 355	29	58			11 355	30	58			12 610	24	55
		8			15 140	52	65			15 140	54	66			16 813	43	63
		10			18 925	81	71			18 925	84	71			21 017	66	68
	750	4	0.863	0.563	8 111	13	47	0.900	0.563	8 111	13	48	0.938	0.626	9 007	11	45
		6			12 166	29	58			12 166	30	58			13 511	24	55
		8			16 222	52	65			16 222	54	66			18 014	43	63
		10			20 277	81	71			20 277	84	72			22 518	66	69
	800	4	0.920	0.601	8 652	13	48	0.960	0.601	8 652	13	48	1.000	0.667	9 608	11	45
		6			12 977	29	58			12 977	30	59			14 412	24	56
		8			17 303	52	66			17 303	54	66			19 215	43	63
		10			21 629	81	72			21 629	84	72			24 019	66	69
	850	4	0.978	0.638	9 192	13	48	1.020	0.638	9 192	13	48	1.063	0.709	10 208	11	45
		6			13 788	29	59			13 788	30	59			15 312	24	56
		8			18 384	52	66			18 384	54	66			20 416	43	63
		10			22 981	81	72			22 981	84	72			25 520	66	69
	900	4	1.035	0.676	9 733	13	48	1.080	0.676	9 733	13	49	1.125	0.751	10 809	11	46
		6			14 599	29	59			14 599	30	59			16 213	24	56
		8			19 466	52	66			19 466	54	67			21 617	43	64
		10			24 332	81	72			24 332	84	73			27 022	66	69

The mcr WIP PRO fire damper selection program is available at **www.mercor.com.pl**, in the Designer Zone.

10.7. estimated weights of mcr WIP PRO/T dampers [kg]

width B [mm]	height H [mm]										
	263	300	400	500	600	700	800	900	1000	1100	1250
110	3	3	4	5	7	8	9	10	11	13	14
150	4	4	6	8	9	11	12	14	16	17	20
200	5	6	8	10	12	15	17	19	21	23	27
250	7	8	12	13	16	18	21	24	27	29	33
300	8	9	12	16	19	22	25	29	32	35	40
350	9	11	15	18	22	26	30	34	37	41	47
400	11	12	17	21	25	30	34	38	43	47	54
500	14	16	21	27	32	37	43	48	54	59	67
600	16	19	25	32	38	45	51	58	64	71	81
700	19	22	30	37	45	52	60	68	75	83	94
800	22	25	34	43	51	60	69	77	86	95	108
900	25	29	38	48	58	68	77	87	97	106	128

The table shows the weights of dampers with RST-KW1 trigger control mechanisms or actuators.

10.8. accessories

10.8.1. mcr KRP connection pipe

The mcr KRP connection pipes are used to connect a circular ventilation duct to a rectangular damper. The connection is a "bare end" pipe. The diameter of the pipe is 2 mm smaller than the diameter of the ventilation duct.

Dimensions:

BxH - damper dimensions [mm]

ØD - diameter of the connection duct [mm]

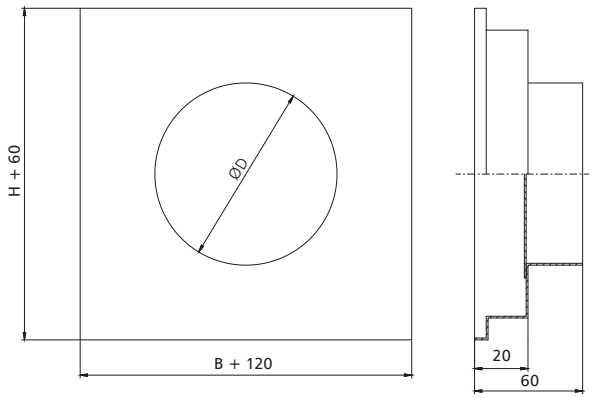

10.9. marking

mcr WIP PRO/T / B x H / 1 / 2 / 3

- additional parameters
- material
- control
- width x height (nominal)
- damper type

1 – control:

– RST-KW1 trigger control mechanism
RST-KW1/S – thermal trigger
RST-KW1/S/WK2 – thermal trigger + limit switch (open/closed blade signal)
RST-KW1/24I – thermal trigger + "pulse" electromagnetic trigger, U = 24 V DC and a limit switch (closed/open partition signalling)
RST-KW1/24P – thermal trigger + "break" electromagnetic trigger, U = 24 V DC and a limit switch (closed/open partition signalling)
RST-KW1/230I – thermal trigger + "pulse" electromagnetic trigger, U = 230 V AC and a limit switch (closed/open partition signalling)
RST-KW1/230P – thermal trigger + "break" electromagnetic trigger, U = 230 V AC and a limit switch (closed/open partition signalling)

– Belimo trigger control mechanism
BF24-T – actuator with a return spring, U = 24 V AC/DC
BF230-T – actuator with a return spring, U = 230 V AC
BF24TL-T-ST (with the BKN230-24MP option) – actuator with a return spring, U = 24 V, MP Bus digital control
EXBF24-T – explosion proof actuator with a return spring in the Ex version, U = 24 V AC/DC
EXBF230-T – explosion proof actuator with a return spring in the Ex version, U = 230 V AC
BF24-T-ST (with the BKN230-24 option) – actuator with a return spring, for the SBS Control system
BFL24-T – actuator with a return spring, U = 24 V AC/DC
BFL230-T – actuator with a return spring, U = 230 V AC
BFL24-T-ST (with the BKN230-24 option) – actuator with a return spring, for the SBS Control system
BFN24-T – actuator with a return spring, U = 24 V AC/DC
BFN230-T – actuator with a return spring, U = 230 V AC
BFN24-T-ST (with the BKN230-24 option) – actuator with a return spring, for the SBS Control system

2 – material:

[no symbol] – galvanised steel, Zn 275 g/m^2 coating
KN – stainless steel
KK – 1.4404 acid-proof steel

3 – additional parameters:

Thermoelectric and thermal triggers
[no symbol] – trigger for 72°C
ZBAE95 – thermoelectric trigger for 95°C
ZBAT95 – thermoelectric trigger for 95°C
T93-95 – thermal trigger for 95°C

Axis of rotation of the damper
[no symbol] – horizontal axis of rotation
PP – vertical axis of rotation
PP_D – vertical axis of rotation - mechanism at the bottom of the damper
PP_G – vertical axis of rotation - mechanism at the top of the damper

Manufacture standard (see chapter 14.2 of this Catalogue)
[no symbol] – left damper
KP – right damper

Note: the additional parameters to be entered preceded by the "/" sign

example marking:

mcr WIP PRO/T 400 x 400 BFL24-T

Louvered fire damper EIS120 with a compact 24 V Belimo actuator with limit switches.

Chapter 13 - power supply and control (p. 203) contains:
- **technical specifications and connection diagrams for the trigger control mechanisms supporting the damper.**

Chapter 14 - additional information (p. 210) contains:
- **location of trigger control mechanisms in relation to the damper - production standards,**
- **table for quick selection of dampers, depending on fire separation and its thickness,**
- **installation distances: damper-ceiling, damper-wall, damper-damper.**

mcr WIP PRO/V
mcr WIP PRO/V-M

multi-blade smoke exhaust fire dampers for multi-zone fire ventilation systems

PRODUCT CONFIGURATOR AND CAD MODELS/BIM AT WWW.MERCOR.COM.PL IN THE DESIGNER'S ZONE

BIM CAD

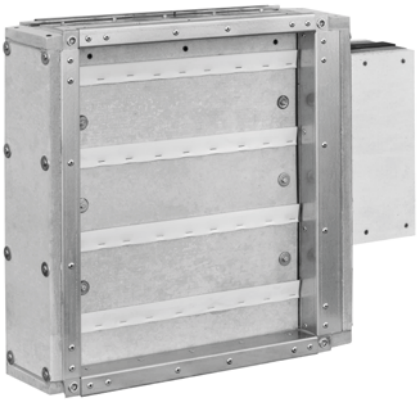

2334-CPR-0014

CTO S.A.

ATEST HIGIENICZNY

- EIS120, EIS90, ES120
- **Certificate of constancy of performance 2434-CPR-0014.**
- **Dampers certified for compliance with EN 12101-8.**
- **Dampers qualified under EN 13501-4 and tested under EN 1366-10.**
- **Narrow louvered fire dampers for fire ventilation systems.**

11.1. application

The mcr WIP PRO/V, mcr WIP PRO/V-M multi-blade cut-off dampers are intended for installation in automatically operated fire ventilation systems. The mcr WIP PRO/V dampers are used in fire ventilation systems, while dampers marked mcr WIP PRO/V-M are used in mixed, fire and comfort ventilation systems. They support both single and multiple fire zones in building. The devices prevent fire, smoke and fire gases propagation to the adjacent areas. During normal operation, the fire damper is in open or closed position depending on its function. In the fire-covered area, the fire damper is open, whereas it remains closed in the other areas. The mcr WIP PRO/V, mcr WIP PRO/V-M fire dampers due to their design are intended for use in systems, where the components such as a silencer, bend or supply and extraction grille are installed downstream of the fire damper.

11.2. design

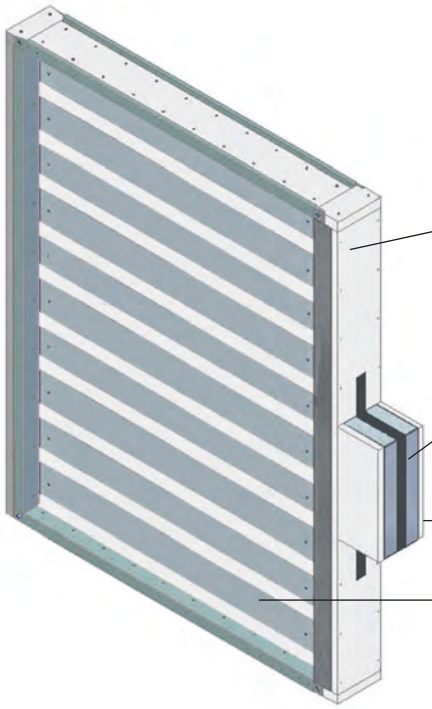

Multi-blade mcr WIP PRO/V, mcr WIP PRO/V-M dampers consist of a rectangular casing made of two steel sections joined with a non-combustible plate using rivets and galvanized steel fasteners, a set of movable blades rotating around their axis and a trigger control mechanism. The fire damper casing is made of fire resistant panels and galvanized steel "C" shape profiles. The device is reinforced on both sides with steel corners. Intumescent and ventilation seals are installed on the inside. Each fire damper blade is made of two 20 mm thick fire resistant plates. Intumescent seal and ventilation seals fixed with staples are installed at the entire blade length. The blades rotate around the axis made by two steel pins. Each pin is mounted in a brass sleeve mounted on a vertical side H of the fire damper casing.

11.3. versions

11.3.1. **mcr WIP PRO/V, mcr WIP PRO/V-M** fire damper for multi-zone fire ventilation systems with actuator – damper opened/closed with an actuator

During normal operation, the louvers are open or closed. In case of fire, the fire damper louvers are opened in the fire-covered area and closed in the other areas - the fire damper is released remotely by feeding the supply voltage to the trigger control mechanism.

mcr WIP PRO/V, mcr WIP PRO/V-M fire dampers are equipped with a Belimo trigger control mechanisms **BLE**, **BE** axial actuator without the return spring, powered with 24 V AC/DC or 230 V AC. BLE, BE series actuators are equipped with limit switches used to monitor the louver position. Furthermore, the mechanical blade position indicator is placed on the actuator.

mcr WIP PRO/V, mcr WIP PRO/V-M fire dampers with Belimo BLE, BE actuators are opened or closed by supplying voltage to the actuator terminals. Furthermore, dampers with those actuators may be opened/closed manually using a key.

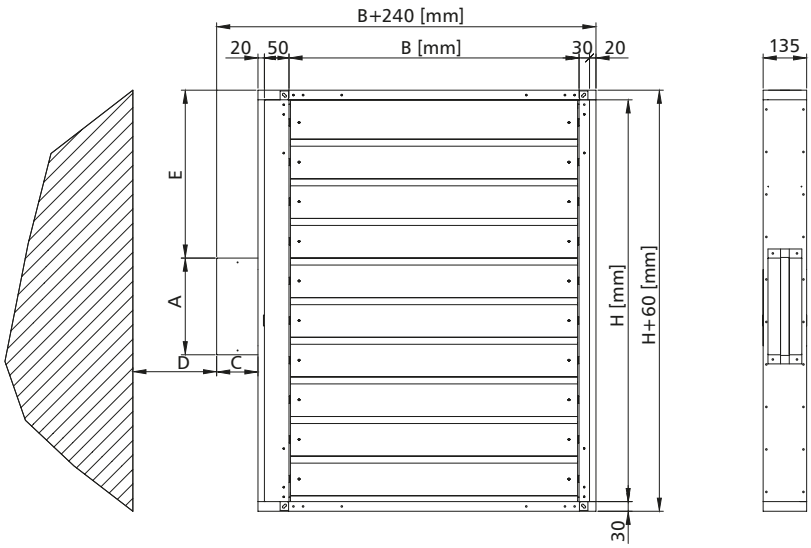

insert symmetrically in relation to the axis of the wall

mechanism	A	C	D	E
BE, BLE	298	120	75	formula

for the even number of blades	for the odd number of blades
E [mm] = (H/2 - 123) + 30	E [mm] = (H/2 - 61.5) + 30

Number of blades = H/123.

11.4. dimensions

Rectangular dampers:

- nominal width B: from 110 mm to 1250 mm
- nominal height H: from 270 mm to 1250 mm
- the maximum cross-section surface of one damper up to 1.5625 m^2

Apart from the standard dimensions, fire dampers may be manufactured with intermediate dimensions (in 10 mm increments, in the given range).

Square fire dampers may also be fitted with round connectors for the spigot connection to the round ducts.

11.5. installation

The mcr WIP PRO/V, mcr WIP PRO/V-M rectangular dampers are class EI120(v_{ew} i↔o)S1000$_{10000}$AAmulti-rated, when installed in a concrete partition, min. 110 mm thick, partition made of full bricks or cellular concrete blocks, min. thicknessof 115 mm, lightweight walls with EI120 or higher fire rating.

11.5.1. preparation of installation openings

The minimum dimensions of the installation opening that permits correct installation of the mcr WIP PRO/V, mcr WIP PRO/V-M damper is:

Bo = (B + 240) + 40 mm
Ho = (H + 60) + 40 mm

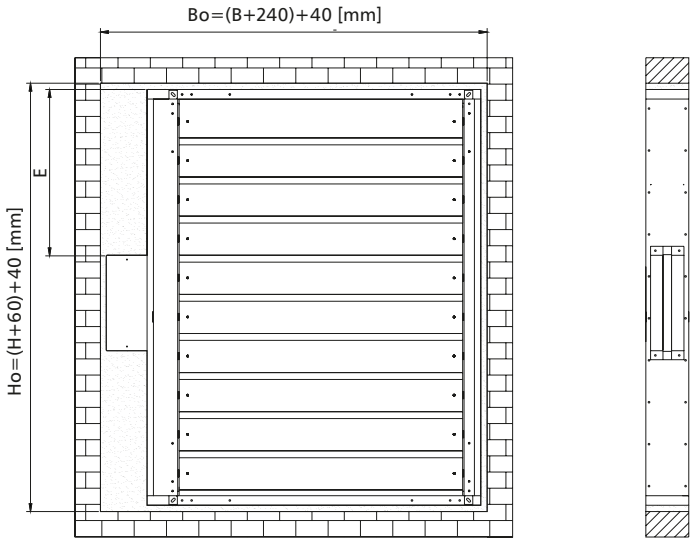

Dimension E (distance from the top fire damper edge to the edge of the trigger control mechanism box) - depending on the dimension H and the trigger control mechanism used:

mechanism	for the even number of blades	for the odd number of blades
BE, BLE	E [mm] = (H/2 - 123) + 30	E [mm] = (H/2 - 61.5) + 30

11.5.2. sample installation in concrete block or full brick walls

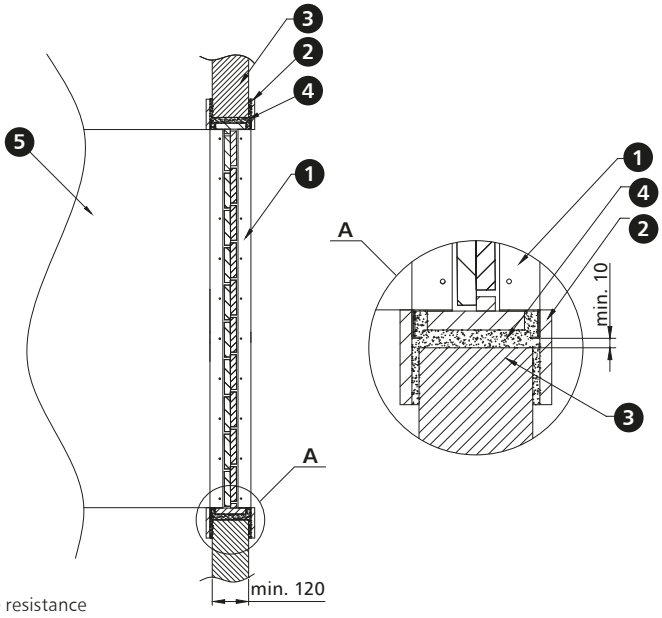

1. mcr WIP PRO fire damper
2. gypsum board trim 100x12.5 mm
3. brick masonry wall
4. masonry mortar (e.g. gypsum)*
5. smoke ventilation duct

*it is possible to use a different sealing which ensures the required fire resistance

11.5.3. sample installation in lightweight walls

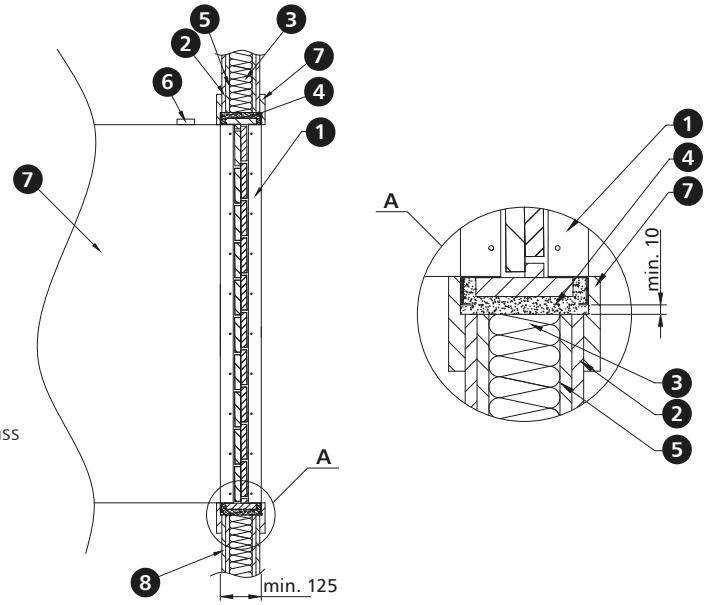

1. mcr WIP PRO fire damper
2. gypsum board 12.5 mm
3. mineral wool with the density of at least 80 kg/m^3, A1 class
4. mortar (e.g. gypsum)*
5. structural profile
6. gypsum board trim 100x12.5 mm
7. smoke ventilation duct
8. gypsum board partition wall

*it is possible to use a different sealing which ensures the required fire resistance

11.5.4. sample installation outside the fire partition

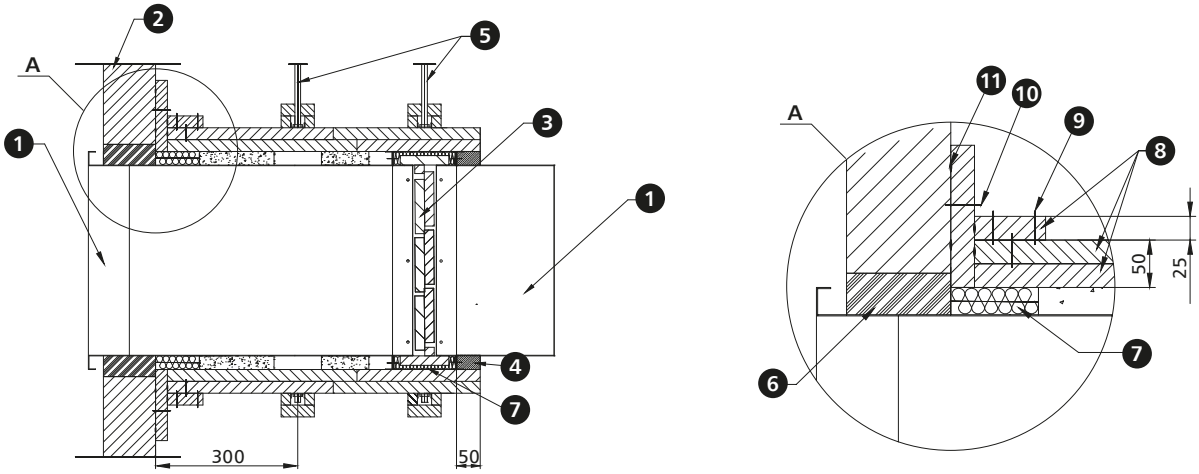

1. smoke ventilation duct
2. partition wall
3. mcr WIP PRO fire damper
4. gypsum infill
5. duct suspension
6. sealing (cement or cement-lime masonry mortar)*
7. mineral wool with the density of at least 80 kg/m^3, A1 class
8. fire protection material ensuring EI120 fire rating or higher
9. screws 3.5 x 50 at ~150 mm centres
10. steel expansion anchor Ø8 x 80 mm
11. board joints sealed with Conlit Glue

*it is possible to use a different sealing which ensures the required fire resistance

11.5.5. example of modular assembly

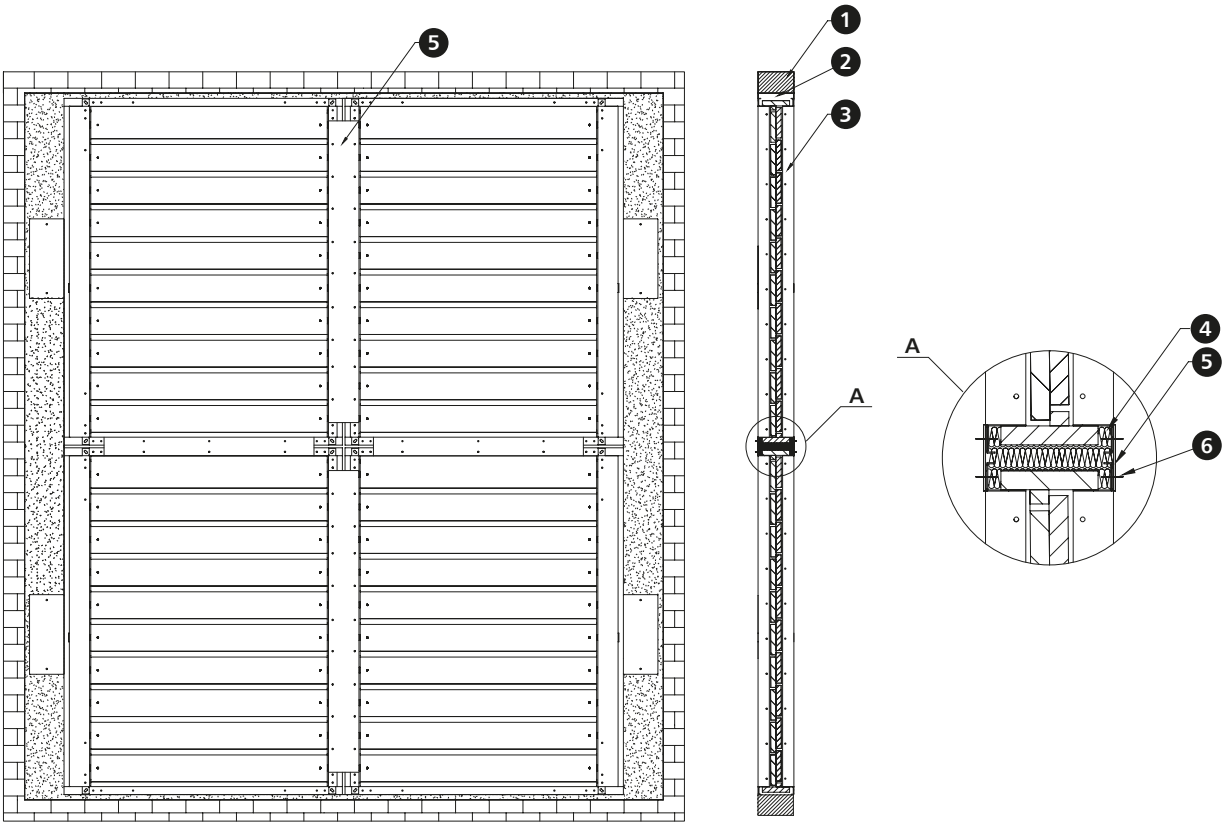

1. e.g. masonry wall
2. e.g. cement mortar*
3. mcr WIP PRO fire damper module
4. mineral wool with the density of at least 80 kg/m^3, A1 class 1
5. steel flat bar, dimensions:
   - vertical H: width 110 mm, thickness 2 mm
   - horizontal B: width 70 mm, thickness 2 mm
6. ST8x16 screw

*it is possible to use a different sealing which ensures the required fire resistance

Example applications - installation with masking cover

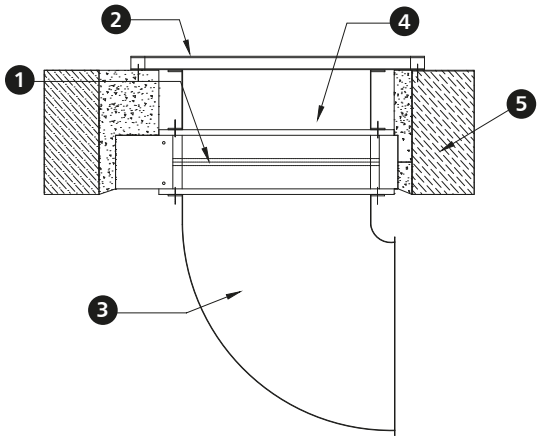

1. mcr WIP PRO fire damper
2. duct cover
3. ventilation duct
4. duct - ventilation straight connection piece
5. wall, ceiling

For WIP PRO/V, mcr WIP PRO/V-M dampers with louvers (no single-blade), available free space in front or behind of the fire damper can be used for the installation of its system components including the masking cover, silencer or leading the duct along the wall, using bends or reducer couplings.

Fire damper installation with vertical rotation axis of the louvers

The fire damper can operate with a vertical axis of louver rotation with the top or bottom-mounted mechanism.

Distance between systems and partitions

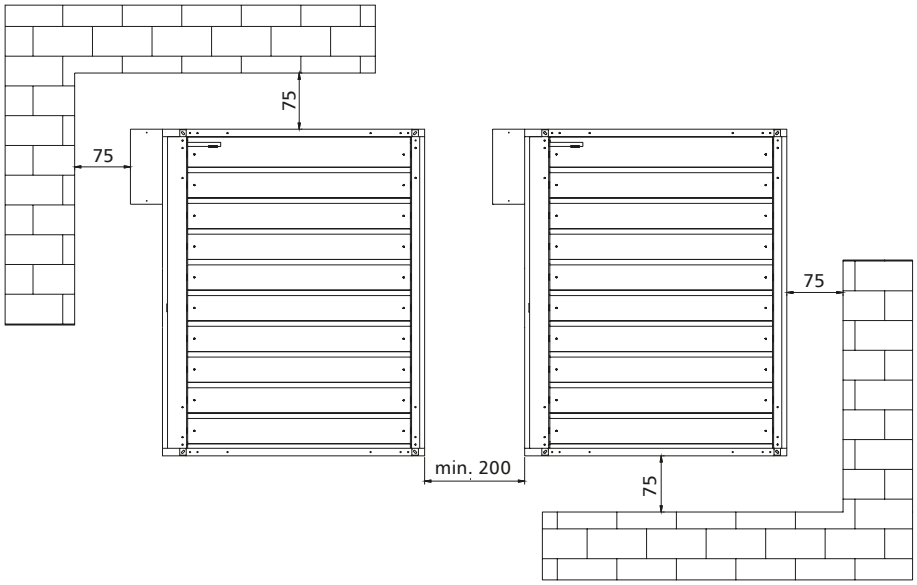

11.6. technical parameters of mcr WIP PRO/V, mcr WIP PRO/V-M rectangular dampers

B – nominal width [mm]
H – nominal height [mm]

v – velocity [m/s]
Sk – duct cross-section [m²]
Se – damper active cross-section [m²]

Q – flow [m³/h]
dp – pressure drop [Pa]
L_{WA} – damper noise level [dB]

			height H [mm]														
			270					300					350				
		v [m/s]	Sk [m²]	Se [m²]	Q [m³/h]	dp [Pa]	L_{WA} [dB]	Sk [m²]	Se [m²]	Q [m³/h]	dp [Pa]	L_{WA} [dB]	Sk [m²]	Se [m²]	Q [m³/h]	dp [Pa]	L_{WA} [dB]
width B [mm]	110	4	0.029	0.019	269	13	33	0.033	0.019	269	14	34	0.039	0.019	269	16	36
		6			404	28	43			404	30	44			404	36	46
		8			539	50	51			539	54	52			539	63	54
		10			673	78	57			673	85	58			673	99	60
	150	4	0.040	0.026	367	13	34	0.045	0.026	367	14	35	0.053	0.026	367	16	37
		6			551	28	45			551	30	46			551	36	48
		8			734	50	52			734	54	53			734	63	55
		10			918	78	58			918	85	59			918	99	61
	200	4	0.053	0.034	490	13	35	0.060	0.034	490	14	36	0.070	0.034	490	16	38
		6			734	28	46			734	30	47			734	36	49
		8			979	50	53			979	54	54			979	63	56
		10			1 224	78	59			1 224	84	60			1 224	99	62
	250	4	0.067	0.043	612	13	36	0.075	0.043	612	14	37	0.088	0.043	612	16	39
		6			918	28	47			918	30	48			918	36	50
		8			1 224	50	54			1 224	54	55			1 224	63	57
		10			1 530	78	60			1 530	85	61			1 530	99	63
	300	4	0.080	0.051	734	13	37	0.090	0.051	734	14	38	0.105	0.051	734	16	40
		6			1 102	28	48			1 102	30	49			1 102	36	51
		8			1 469	50	55			1 469	54	56			1 469	63	58
		10			1 836	78	61			1 836	85	62			1 836	99	64
	350	4	0.093	0.060	857	13	38	0.105	0.060	857	14	39	0.123	0.060	857	16	41
		6			1 285	28	48			1 285	30	49			1 285	36	51
		8			1 714	50	56			1 714	54	57			1 714	63	59
		10			2 142	78	62			2 142	85	63			2 142	99	65
	400	4	0.106	0.068	979	13	38	0.120	0.068	979	14	39	0.140	0.068	979	16	41
		6			1 469	28	49			1 469	30	50			1 469	36	52
		8			1 958	50	56			1 958	54	57			1 958	63	59
		10			2 448	78	62			2 448	84	63			2 448	99	65
	450	4	0.120	0.077	1 102	13	39	0.135	0.077	1 102	14	40	0.158	0.077	1 102	16	42
		6			1 652	28	49			1 652	30	50			1 652	36	52
		8			2 203	50	57			2 203	54	58			2 203	63	60
		10			2 754	78	63			2 754	84	64			2 754	99	66
	500	4	0.133	0.085	1 224	13	39	0.150	0.085	1 224	14	40	0.175	0.085	1 224	16	42
		6			1 836	28	50			1 836	30	51			1 836	36	53
		8			2 448	50	57			2 448	54	58			2 448	63	60
		10			3 060	78	63			3 060	85	64			3 060	99	66
	550	4	0.146	0.094	1 346	2	13	0.165	0.094	1 346	14	41	0.193	0.094	1 346	16	43
		6			2 020	4	23			2 020	30	51			2 020	36	53
		8			2 693	6	31			2 693	54	59			2 693	63	61
		10			3 366	10	36			3 366	84	65			3 366	99	67
	600	4	0.160	0.102	1 469	13	40	0.180	0.102	1 469	14	41	0.210	0.102	1 469	16	43
		6			2 203	28	51			2 203	30	52			2 203	36	54
		8			2 938	50	58			2 938	54	59			2 938	63	61
		10			3 672	78	64			3 672	85	65			3 672	99	67
	650	4	0.173	0.111	1 591	13	40	0.195	0.111	1 591	14	41	0.228	0.111	1 591	16	43
		6			2 387	28	51			2 387	30	52			2 387	36	54
		8			3 182	50	58			3 182	54	59			3 182	63	62
		10			3 978	78	64			3 978	85	65			3 978	99	67

11.6. technical parameters of mcr WIP PRO/V, mcr WIP PRO/V-M rectangular dampers

B – nominal width [mm]
H – nominal height [mm]

v – velocity [m/s]
Sk – duct cross-section [m²]
Se – damper active cross-section [m²]

Q – flow [m³/h]
dp – pressure drop [Pa]
L_{WA} – damper noise level [dB]

			height H [mm]														
			270					300					350				
		v [m/s]	Sk [m²]	Se [m²]	Q [m³/h]	dp [Pa]	L_{WA} [dB]	Sk [m²]	Se [m²]	Q [m³/h]	dp [Pa]	L_{WA} [dB]	Sk [m²]	Se [m²]	Q [m³/h]	dp [Pa]	L_{WA} [dB]
width B [mm]	700	4	0.186	0.119	1 714	13	41	0.210	0.119	1 714	14	42	0.245	0.119	1 714	16	44
		6			2 570	28	51			2 570	30	52			2 570	36	54
		8			3 427	50	59			3 427	54	60			3 427	63	62
		10			4 284	78	65			4 284	85	66			4 284	99	68
	750	4	0.200	0.128	1 836	13	41	0.225	0.128	1 836	14	42	0.263	0.128	1 836	16	44
		6			2 754	28	52			2 754	30	53			2 754	36	55
		8			3 672	50	59			3 672	54	60			3 672	63	62
		10			4 590	78	65			4 590	85	66			4 590	99	68
	800	4	0.213	0.136	1 958	13	41	0.240	0.136	1 958	14	42	0.280	0.136	1 958	16	44
		6			2 938	28	52			2 938	30	53			2 938	36	55
		8			3 917	50	59			3 917	54	60			3 917	63	62
		10			4 896	78	65			4 896	84	66			4 896	99	68
	850	4	0.226	0.145	2 081	13	42	0.255	0.145	2 081	14	43	0.298	0.145	2 081	16	45
		6			3 121	28	52			3 121	30	53			3 121	36	55
		8			4 162	50	60			4 162	54	61			4 162	63	63
		10			5 202	78	65			5 202	84	66			5 202	99	68
	900	4	0.239	0.153	2 203	13	42	0.270	0.153	2 203	14	43	0.315	0.153	2 203	16	45
		6			3 305	28	52			3 305	30	53			3 305	36	55
		8			4 406	50	60			4 406	54	61			4 406	63	63
		10			5 508	78	66			5 508	84	67			5 508	99	69
	950	4	0.253	0.162	2 326	13	42	0.285	0.162	2 326	18	47	0.333	0.162	2 326	25	51
		6			3 488	28	53			3 488	41	57			3 488	57	62
		8			4 651	50	60			4 651	72	65			4 651	102	69
		10			5 814	78	66			5 814	113	71			5 814	159	75
	1000	4	0.266	0.170	2 448	13	42	0.300	0.170	2 448	18	47	0.350	0.170	2 448	25	51
		6			3 672	28	53			3 672	41	58			3 672	57	62
		8			4 896	50	60			4 896	72	65			4 896	102	70
		10			6 120	78	66			6 120	113	71			6 120	159	75
	1050	4	0.279	0.179	2 570	13	42	0.315	0.179	2 570	18	47	0.368	0.179	2 570	25	52
		6			3 856	28	53			3 856	41	58			3 856	57	62
		8			5 141	50	60			5 141	72	65			5 141	102	70
		10			6 426	78	66			6 426	113	71			6 426	159	76
	1100	4	0.293	0.187	2 693	13	43	0.330	0.187	2 693	18	47	0.385	0.187	2 693	25	52
		6			4 039	28	53			4 039	41	58			4 039	57	62
		8			5 386	50	61			5 386	72	65			5 386	102	70
		10			6 732	78	67			6 732	113	71			6 732	159	76
	1150	4	0.306	0.196	2 815	13	43	0.345	0.196	2 815	18	48	0.403	0.196	2 815	25	52
		6			4 223	28	53			4 223	41	58			4 223	57	63
		8			5 630	50	61			5 630	72	66			5 630	102	70
		10			7 038	78	67			7 038	113	71			7 038	159	76
	1200	4	0.319	0.204	2 938	13	43	0.360	0.204	2 938	18	48	0.420	0.204	2 938	25	52
		6			4 406	28	54			4 406	41	58			4 406	57	63
		8			5 875	50	61			5 875	72	66			5 875	102	70
		10			7 344	78	67			7 344	113	72			7 344	159	76
	1250	4	0.333	0.213	3 060	13	43	0.375	0.213	3 060	18	48	0.438	0.213	3 060	25	52
		6			4 590	28	54			4 590	41	59			4 590	57	63
		8			6 120	50	61			6 120	72	66			6 120	102	70
					7 650	78	67			7 650	113	72			7 650	159	76

11.6. technical parameters of mcr WIP PRO/V, mcr WIP PRO/V-M rectangular dampers

B – nominal width [mm]
H – nominal height [mm]

v – velocity [m/s]
Sk – duct cross-section [m²]
Se – damper active cross-section [m²]

Q – flow [m³/h]
dp – pressure drop [Pa]
L_{WA} – damper noise level [dB]

			height H [mm]														
			400					450					500				
		v [m/s]	Sk [m²]	Se [m²]	Q [m³/h]	dp [Pa]	L_{WA} [dB]	Sk [m²]	Se [m²]	Q [m³/h]	dp [Pa]	L_{WA} [dB]	Sk [m²]	Se [m²]	Q [m³/h]	dp [Pa]	L_{WA} [dB]
width B [mm]	110	4	0.044	0.028	401	13	35	0.050	0.028	401	14	36	0.056	0.037	532	11	34
		6			601	29	45			601	31	46			798	26	45
		8			802	52	53			802	55	54			1 064	45	52
		10			1 002	81	59			1 002	86	60			1 331	71	58
	150	4	0.060	0.038	546	13	36	0.068	0.038	546	14	37	0.077	0.050	726	11	36
		6			820	29	47			820	31	48			1 089	26	46
		8			1 093	52	54			1 093	55	55			1 452	45	54
		10			1 366	81	60			1 366	86	61			1 814	71	60
	200	4	0.080	0.051	729	13	37	0.090	0.051	729	14	38	0.102	0.067	968	11	37
		6			1 093	29	48			1 093	31	49			1 452	26	47
		8			1 457	52	55			1 457	55	56			1 935	45	55
		10			1 822	81	61			1 822	86	62			2 419	71	61
	250	4	0.100	0.063	911	13	38	0.113	0.063	911	14	39	0.128	0.084	1 210	11	38
		6			1 366	29	49			1 366	31	50			1 814	26	48
		8			1 822	52	56			1 822	55	57			2 419	45	56
		10			2 277	81	62			2 277	86	63			3 024	71	62
	300	4	0.120	0.076	1 093	13	39	0.135	0.076	1 093	14	40	0.154	0.101	1 452	11	39
		6			1 639	29	50			1 639	31	51			2 177	26	49
		8			2 186	52	57			2 186	55	58			2 903	45	57
		10			2 732	81	63			2 732	86	64			3 629	71	63
	350	4	0.140	0.089	1 275	13	40	0.158	0.089	1 275	14	41	0.179	0.118	1 693	11	39
		6			1 913	29	50			1 913	31	51			2 540	26	50
		8			2 550	52	58			2 550	55	59			3 387	45	57
		10			3 188	81	64			3 188	86	65			4 234	71	63
	400	4	0.160	0.101	1 457	13	40	0.180	0.101	1 457	14	41	0.205	0.134	1 935	11	40
		6			2 186	29	51			2 186	31	52			2 903	26	50
		8			2 915	52	58			2 915	55	59			3 871	45	58
		10			3 643	81	64			3 643	86	65			4 838	71	64
	450	4	0.180	0.114	1 639	13	41	0.203	0.114	1 639	14	42	0.230	0.151	2 177	11	40
		6			2 459	29	52			2 459	31	52			3 266	26	51
		8			3 279	52	59			3 279	55	60			4 355	45	59
		10			4 099	81	65			4 099	86	66			5 443	71	64
	500	4	0.200	0.127	1 822	13	41	0.225	0.127	1 822	14	42	0.256	0.168	2 419	11	41
		6			2 732	29	52			2 732	31	53			3 629	26	51
		8			3 643	52	59			3 643	55	60			4 838	45	59
		10			4 554	81	65			4 554	86	66			6 048	71	65
	550	4	0.220	0.139	2 004	13	42	0.248	0.139	2 004	14	43	0.282	0.185	2 661	11	41
		6			3 006	29	52			3 006	31	53			3 992	26	52
		8			4 008	52	60			4 008	55	61			5 322	45	59
		10			5 009	81	66			5 009	86	67			6 653	71	65
	600	4	0.240	0.152	2 186	13	42	0.270	0.152	2 186	14	43	0.307	0.202	2 903	11	42
		6			3 279	29	53			3 279	31	54			4 355	26	52
		8			4 372	52	60			4 372	55	61			5 806	45	60
		10			5 465	81	66			5 465	86	67			7 258	71	66
	650	4	0.260	0.164	2 368	13	43	0.293	0.164	2 368	14	43	0.333	0.218	3 145	11	42
		6			3 552	29	53			3 552	31	54			4 717	26	53
		8			4 736	52	61			4 736	55	61			6 290	45	60
		10			5 920	81	66			5 920	86	67			7 862	71	66

11.6. technical parameters of mcr WIP PRO/V, mcr WIP PRO/V-M rectangular dampers

B – nominal width [mm]
H – nominal height [mm]

v – velocity [m/s]
Sk – duct cross-section [m²]
Se – damper active cross-section [m²]

Q – flow [m³/h]
dp – pressure drop [Pa]
L_{WA} – damper noise level [dB]

			height H [mm]														
			400					450					500				
		v [m/s]	Sk [m²]	Se [m²]	Q [m³/h]	dp [Pa]	L_{WA} [dB]	Sk [m²]	Se [m²]	Q [m³/h]	dp [Pa]	L_{WA} [dB]	Sk [m²]	Se [m²]	Q [m³/h]	dp [Pa]	L_{WA} [dB]
width B [mm]	700	4	0.280	0.177	2 550	13	43	0.315	0.177	2 550	14	44	0.358	0.235	3 387	11	42
		6			3 825	29	53			3 825	31	54			5 080	26	53
		8			5 100	52	61			5 100	55	62			6 774	45	60
		10			6 376	81	67			6 376	86	68			8 467	71	66
	750	4	0.300	0.190	2 732	13	43	0.338	0.190	2 732	14	44	0.384	0.252	3 629	11	43
		6			4 099	29	54			4 099	31	55			5 443	26	53
		8			5 465	52	61			5 465	55	62			7 258	45	61
		10			6 831	81	67			6 831	86	68			9 072	71	67
	800	4	0.320	0.202	2 915	13	43	0.360	0.202	2 915	14	43	0.410	0.269	3 871	11	43
		6			4 372	29	54			4 372	31	54			5 806	26	53
		8			5 829	52	62			5 829	55	61			7 741	45	61
		10			7 286	81	67			7 286	86	67			9 677	71	67
	850	4	0.340	0.215	3 097	13	44	0.383	0.215	3 097	14	43	0.435	0.286	4 113	11	43
		6			4 645	29	54			4 645	31	54			6 169	26	53
		8			6 193	52	62			6 193	55	61			8 225	45	61
		10			7 742	81	68			7 742	86	67			10 282	71	67
	900	4	0.360	0.228	3 279	13	44	0.405	0.228	3 279	14	43	0.461	0.302	4 355	11	43
		6			4 918	29	55			4 918	31	54			6 532	26	53
		8			6 558	52	62			6 558	55	61			8 709	45	61
		10			8 197	81	68			8 197	86	67			10 886	71	67
	950	4	0.380	0.240	3 461	13	44	0.428	0.240	3 461	18	49	0.486	0.319	4 596	11	44
		6			5 192	29	55			5 192	41	59			6 895	26	54
		8			6 922	52	62			6 922	74	67			9 193	45	62
		10			8 653	81	68			8 653	115	73			11 491	71	68
	1000	4	0.400	0.253	3 643	13	44	0.450	0.253	3 643	18	49	0.512	0.336	4 838	11	44
		6			5 465	29	55			5 465	41	60			7 258	26	54
		8			7 286	52	62			7 286	74	67			9 677	45	62
		10			9 108	81	68			9 108	115	73			12 096	71	68
	1050	4	0.420	0.266	3 825	13	45	0.473	0.266	3 825	18	49	0.538	0.353	5 080	11	44
		6			5 738	29	55			5 738	41	60			7 620	26	55
		8			7 651	52	63			7 651	74	67			10 161	45	62
		10			9 563	81	69			9 563	115	73			12 701	71	68
	1100	4	0.440	0.278	4 008	13	45	0.495	0.278	4 008	18	49	0.563	0.370	5 322	11	44
		6			6 011	29	55			6 011	41	60			7 983	26	55
		8			8 015	52	63			8 015	74	67			10 644	45	62
		10			10 019	81	69			10 019	115	73			13 306	71	68
	1150	4	0.460	0.291	4 190	13	45	0.518	0.291	4 190	18	50	0.589	0.386	5 564	11	45
		6			6 285	29	56			6 285	41	60			8 346	26	55
		8			8 379	52	63			8 379	74	68			11 128	45	63
		10			10 474	81	69			10 474	115	73			13 910	71	68
	1200	4	0.480	0.304	4 372	13	45	0.540	0.304	4 372	18	50	0.614	0.403	5 806	11	45
		6			6 558	29	56			6 558	41	60			8 709	26	55
		8			8 744	52	63			8 744	74	68			11 612	45	63
		10			10 930	81	69			10 930	115	74			14 515	71	69
	1250	4	0.500	0.316	4 554	13	45	0.563	0.316	4 554	18	50	0.640	0.420	6 048	11	45
		6			6 831	29	56			6 831	41	61			9 072	26	55
		8			9 108	52	63			9 108	74	68			12 096	45	63
					11 385	81	69			11 385	115	74			15 120	71	69

11.6. technical parameters of mcr WIP PRO/V, mcr WIP PRO/V-M rectangular dampers

B – nominal width [mm]
H – nominal height [mm]

v – velocity [m/s]
Sk – duct cross-section [m²]
Se – damper active cross-section [m²]

Q – flow [m³/h]
dp – pressure drop [Pa]
L_{WA} – damper noise level [dB]

			height H [mm]														
			550					630					650				
		v [m/s]	Sk [m²]	Se [m²]	Q [m³/h]	dp [Pa]	L_{WA} [dB]	Sk [m²]	Se [m²]	Q [m³/h]	dp [Pa]	L_{WA} [dB]	Sk [m²]	Se [m²]	Q [m³/h]	dp [Pa]	L_{WA} [dB]
width B [mm]	110	4	0.061	0.037	532	13	36	0.070	0.046	664	11	35	0.072	0.046	664	12	36
		6			798	29	46			996	25	46			996	27	47
		8			1 064	51	54			1 327	44	53			1 327	48	54
		10			1 331	79	60			1 659	69	59			1 659	76	60
	150	4	0.083	0.050	726	13	37	0.095	0.063	905	11	36	0.098	0.063	905	12	37
		6			1 089	29	48			1 358	25	47			1 358	27	48
		8			1 452	51	55			1 810	44	54			1 810	48	56
		10			1 814	79	61			2 263	69	60			2 263	76	61
	200	4	0.110	0.067	968	13	38	0.127	0.084	1 207	11	38	0.130	0.084	1 207	12	39
		6			1 452	29	49			1 810	25	48			1 810	27	49
		8			1 935	51	56			2 413	44	56			2 413	48	57
		10			2 419	79	62			3 017	69	61			3 017	76	63
	250	4	0.138	0.084	1 210	13	39	0.159	0.105	1 508	11	39	0.163	0.105	1 508	12	40
		6			1 814	29	50			2 263	25	49			2 263	27	50
		8			2 419	51	57			3 017	44	57			3 017	48	58
		10			3 024	79	63			3 771	69	62			3 771	76	64
	300	4	0.165	0.101	1 452	13	40	0.191	0.126	1 810	11	39	0.195	0.126	1 810	12	41
		6			2 177	29	51			2 715	25	50			2 715	27	51
		8			2 903	51	58			3 620	44	57			3 620	48	59
		10			3 629	79	64			4 525	69	63			4 525	76	64
	350	4	0.193	0.118	1 693	13	41	0.222	0.147	2 112	11	40	0.228	0.147	2 112	12	41
		6			2 540	29	51			3 168	25	51			3 168	27	52
		8			3 387	51	59			4 224	44	58			4 224	48	59
		10			4 234	79	65			5 279	69	64			5 279	76	65
	400	4	0.220	0.134	1 935	13	41	0.254	0.168	2 413	11	41	0.260	0.168	2 413	12	42
		6			2 903	29	52			3 620	25	51			3 620	27	52
		8			3 871	51	59			4 827	44	59			4 827	48	60
		10			4 838	79	65			6 034	69	64			6 034	76	66
	450	4	0.248	0.151	2 177	13	42	0.286	0.189	2 715	11	41	0.293	0.189	2 715	12	42
		6			3 266	29	52			4 073	25	52			4 073	27	53
		8			4 355	51	60			5 430	44	59			5 430	48	60
		10			5 443	79	66			6 788	69	65			6 788	76	66
	500	4	0.275	0.168	2 419	13	42	0.318	0.210	3 017	11	42	0.325	0.210	3 017	12	43
		6			3 629	29	53			4 525	25	52			4 525	27	53
		8			4 838	51	60			6 034	44	60			6 034	48	61
		10			6 048	79	66			7 542	69	65			7 542	76	67
	550	4	0.303	0.185	2 661	13	43	0.349	0.230	3 318	11	42	0.358	0.230	3 318	12	43
		6			3 992	29	53			4 978	25	53			4 978	27	54
		8			5 322	51	61			6 637	44	60			6 637	48	61
		10			6 653	79	67			8 296	69	66			8 296	76	67
	600	4	0.330	0.202	2 903	13	43	0.381	0.251	3 620	11	42	0.390	0.251	3 620	12	44
		6			4 355	29	54			5 430	25	53			5 430	27	54
		8			5 806	51	61			7 240	44	60			7 240	48	62
		10			7 258	79	67			9 050	69	66			9 050	76	67
	650	4	0.358	0.218	3 145	13	44	0.413	0.272	3 922	11	43	0.423	0.272	3 922	12	44
		6			4 717	29	54			5 883	25	53			5 883	27	54
		8			6 290	51	62			7 844	44	61			7 844	48	62
		10			7 862	79	67			9 805	69	67			9 805	76	68

11.6. technical parameters of mcr WIP PRO/V, mcr WIP PRO/V-M rectangular dampers

B – nominal width [mm]
H – nominal height [mm]

v – velocity [m/s]
Sk – duct cross-section [m²]
Se – damper active cross-section [m²]

Q – flow [m³/h]
dp – pressure drop [Pa]
L_{WA} – damper noise level [dB]

			height H [mm]														
			550					630					650				
		v [m/s]	Sk [m²]	Se [m²]	Q [m³/h]	dp [Pa]	L_{WA} [dB]	Sk [m²]	Se [m²]	Q [m³/h]	dp [Pa]	L_{WA} [dB]	Sk [m²]	Se [m²]	Q [m³/h]	dp [Pa]	L_{WA} [dB]
width B [mm]	700	4	0.385	0.235	3 387	13	44	0.445	0.293	4 224	11	43	0.455	0.293	4 224	12	44
		6			5 080	29	54			6 335	25	54			6 335	27	55
		8			6 774	51	62			8 447	44	61			8 447	48	62
		10			8 467	79	68			10 559	69	67			10 559	76	68
	750	4	0.413	0.252	3 629	13	44	0.476	0.314	4 525	11	43	0.488	0.314	4 525	12	44
		6			5 443	29	55			6 788	25	54			6 788	27	55
		8			7 258	51	62			9 050	44	61			9 050	48	63
		10			9 072	79	68			11 313	69	67			11 313	76	68
	800	4	0.440	0.269	3 871	13	44	0.508	0.335	4 827	11	44	0.520	0.335	4 827	12	44
		6			5 806	29	55			7 240	25	54			7 240	27	55
		8			7 741	51	62			9 654	44	62			9 654	48	63
		10			9 677	79	68			12 067	69	67			12 067	76	68
	850	4	0.468	0.286	4 113	13	45	0.540	0.356	5 129	11	44	0.553	0.356	5 129	12	44
		6			6 169	29	55			7 693	25	54			7 693	27	55
		8			8 225	51	63			10 257	44	62			10 257	48	63
		10			10 282	79	69			12 821	69	68			12 821	76	68
	900	4	0.495	0.302	4 355	13	45	0.572	0.377	5 430	11	44	0.585	0.377	5 430	12	44
		6			6 532	29	56			8 145	25	52			8 145	27	55
		8			8 709	51	63			10 860	44	59			10 860	48	63
		10			10 886	79	69			13 576	69	65			13 576	76	68
	950	4	0.523	0.319	4 596	15	47	0.603	0.398	5 732	11	44	0.618	0.398	5 732	12	46
		6			6 895	33	57			8 598	25	55			8 598	27	56
		8			9 193	58	65			11 464	44	62			11 464	48	64
		10			11 491	91	71			14 330	69	68			14 330	76	69
	1000	4	0.550	0.336	4 838	15	47	0.635	0.419	6 034	11	45	0.650	0.419	6 034	12	46
		6			7 258	33	58			9 050	25	55			9 050	27	56
		8			9 677	58	65			12 067	44	63			12 067	48	64
		10			12 096	91	71			15 084	69	68			15 084	76	70
	1050	4	0.578	0.353	5 080	15	47	0.667	0.440	6 335	11	45	0.683	0.440	6 335	12	46
		6			7 620	33	58			9 503	25	55			9 503	27	57
		8			10 161	58	65			12 671	44	63			12 671	48	64
		10			12 701	91	71			15 838	69	69			15 838	76	70
	1100	4	0.605	0.370	5 322	15	48	0.699	0.461	6 637	11	45	0.715	0.461	6 637	12	46
		6			7 983	33	58			9 955	25	56			9 955	27	57
		8			10 644	58	66			13 274	44	63			13 274	48	64
		10			13 306	91	71			16 592	69	69			16 592	76	70
	1150	4	0.633	0.386	5 564	15	48	0.730	0.482	6 939	11	45	0.748	0.482	6 939	12	46
		6			8 346	33	58			10 408	25	56			10 408	27	57
		8			11 128	58	66			13 877	44	63			13 877	48	64
		10			13 910	91	72			17 347	69	69			17 347	76	70
	1200	4	0.660	0.403	5 806	15	48	0.762	0.503	7 240	11	45	0.780	0.503	7 240	12	47
		6			8 709	33	58			10 860	25	56			10 860	27	57
		8			11 612	58	66			14 481	44	63			14 481	48	65
		10			14 515	91	72			18 101	69	69			18 101	76	70
	1250	4	0.688	0.420	6 048	15	48	0.794	0.524	7 542	11	46	0.813	0.524	7 542	12	47
		6			9 072	33	59			11 313	25	56			11 313	27	57
		8			12 096	58	66			15 084	44	64			15 084	48	65
					15 120	91	72			18 855	69	69			18 855	76	71

11.6. technical parameters of mcr WIP PRO/V, mcr WIP PRO/V-M rectangular dampers

B – nominal width [mm]
H – nominal height [mm]

v – velocity [m/s]
Sk – duct cross-section [m²]
Se – damper active cross-section [m²]

Q – flow [m³/h]
dp – pressure drop [Pa]
L_{WA} – damper noise level [dB]

			height H [mm]														
			700					750					800				
		v [m/s]	Sk [m²]	Se [m²]	Q [m³/h]	dp [Pa]	L_{WA} [dB]	Sk [m²]	Se [m²]	Q [m³/h]	dp [Pa]	L_{WA} [dB]	Sk [m²]	Se [m²]	Q [m³/h]	dp [Pa]	L_{WA} [dB]
width B [mm]	110	4	0.077	0.046	664	14	38	0.083	0.060	859	9	33	0.088	0.055	795	10	34
		6			996	30	48			1 288	20	44			1 193	22	45
		8			1 327	54	56			1 717	35	51			1 590	40	52
		10			1 659	85	61			2 146	55	57			1 988	62	58
	150	4	0.105	0.063	905	14	39	0.114	0.081	1 171	9	34	0.120	0.075	1 084	10	36
		6			1 358	30	49			1 756	20	45			1 626	22	46
		8			1 810	54	57			2 341	35	52			2 169	40	54
		10			2 263	85	63			2 927	55	58			2 711	62	60
	200	4	0.140	0.084	1 207	14	40	0.152	0.108	1 561	9	36	0.160	0.100	1 446	10	37
		6			1 810	30	51			2 341	20	46			2 169	22	48
		8			2 413	54	58			3 122	35	54			2 892	40	55
		10			3 017	85	64			3 902	55	60			3 614	62	61
	250	4	0.175	0.105	1 508	14	41	0.190	0.136	1 951	9	37	0.200	0.126	1 807	10	38
		6			2 263	30	52			2 927	20	47			2 711	22	49
		8			3 017	54	59			3 902	35	55			3 614	40	56
		10			3 771	85	65			4 878	55	60			4 518	62	62
	300	4	0.210	0.126	1 810	14	42	0.227	0.163	2 341	9	37	0.240	0.151	2 169	10	39
		6			2 715	30	53			3 512	20	48			3 253	22	49
		8			3 620	54	60			4 683	35	55			4 337	40	57
		10			4 525	85	66			5 854	55	61			5 422	62	63
	350	4	0.245	0.147	2 112	14	43	0.265	0.190	2 732	9	38	0.280	0.176	2 530	10	39
		6			3 168	30	53			4 098	20	49			3 795	22	50
		8			4 224	54	61			5 463	35	56			5 060	40	57
		10			5 279	85	66			6 829	55	62			6 325	62	63
	400	4	0.280	0.168	2 413	14	43	0.303	0.217	3 122	9	39	0.320	0.201	2 892	10	40
		6			3 620	30	54			4 683	20	49			4 337	22	51
		8			4 827	54	61			6 244	35	57			5 783	40	58
		10			6 034	85	67			7 805	55	63			7 229	62	64
	450	4	0.315	0.189	2 715	14	44	0.341	0.244	3 512	9	39	0.360	0.226	3 253	10	41
		6			4 073	30	54			5 268	20	50			4 879	22	51
		8			5 430	54	62			7 024	35	57			6 506	40	59
		10			6 788	85	68			8 780	55	63			8 132	62	64
	500	4	0.350	0.210	3 017	14	44	0.379	0.271	3 902	9	40	0.400	0.251	3 614	10	41
		6			4 525	30	55			5 854	20	50			5 422	22	52
		8			6 034	54	62			7 805	35	58			7 229	40	59
		10			7 542	85	68			9 756	55	63			9 036	62	65
	550	4	0.385	0.230	3 318	14	45	0.417	0.298	4 293	9	40	0.440	0.276	3 976	10	41
		6			4 978	30	55			6 439	20	51			5 964	22	52
		8			6 637	54	63			8 585	35	58			7 952	40	59
		10			8 296	85	68			10 732	55	64			9 940	62	65
	600	4	0.420	0.251	3 620	14	45	0.455	0.325	4 683	9	40	0.480	0.301	4 337	10	42
		6			5 430	30	56			7 024	20	51			6 506	22	52
		8			7 240	54	63			9 366	35	58			8 675	40	60
		10			9 050	85	69			11 707	55	64			10 843	62	66
	650	4	0.455	0.272	3 922	14	45	0.493	0.352	5 073	9	41	0.520	0.326	4 699	10	42
		6			5 883	30	56			7 610	20	51			7 048	22	53
		8			7 844	54	63			10 146	35	59			9 397	40	60
		10			9 805	85	69			12 683	55	65			11 747	62	66

11.6. technical parameters of mcr WIP PRO/V, mcr WIP PRO/V-M rectangular dampers

B – nominal width [mm]
H – nominal height [mm]

v – velocity [m/s]
Sk – duct cross-section [m²]
Se – damper active cross-section [m²]

Q – flow [m³/h]
dp – pressure drop [Pa]
L_{WA} – damper noise level [dB]

			height H [mm]														
			700					750					800				
		v [m/s]	Sk [m²]	Se [m²]	Q [m³/h]	dp [Pa]	L_{WA} [dB]	Sk [m²]	Se [m²]	Q [m³/h]	dp [Pa]	L_{WA} [dB]	Sk [m²]	Se [m²]	Q [m³/h]	dp [Pa]	L_{WA} [dB]
width B [mm]	700	4	0.490	0.293	4 224	14	46	0.531	0.379	5 463	9	41	0.560	0.351	5 060	10	42
		6			6 335	30	56			8 195	20	52			7 590	22	53
		8			8 447	54	64			10 927	35	59			10 120	40	61
		10			10 559	85	69			13 658	55	65			12 650	62	66
	750	4	0.525	0.314	4 525	14	46	0.569	0.407	5 854	9	41	0.600	0.377	5 422	10	43
		6			6 788	30	56			8 780	20	52			8 132	22	53
		8			9 050	54	64			11 707	35	59			10 843	40	61
		10			11 313	85	70			14 634	55	65			13 554	62	67
	800	4	0.560	0.335	4 827	14	44	0.606	0.434	6 244	9	42	0.640	0.402	5 783	10	43
		6			7 240	30	55			9 366	20	52			8 675	22	54
		8			9 654	54	62			12 488	35	60			11 566	40	61
		10			12 067	85	67			15 610	55	66			14 458	62	67
	850	4	0.595	0.356	5 129	14	46	0.644	0.461	6 634	9	42	0.680	0.427	6 144	10	43
		6			7 693	30	57			9 951	20	52			9 217	22	54
		8			10 257	54	65			13 268	35	60			12 289	40	61
		10			12 821	85	70			16 585	55	66			15 361	62	67
	900	4	0.630	0.377	5 430	14	47	0.682	0.488	7 024	9	42	0.720	0.452	6 506	10	44
		6			8 145	30	57			10 536	20	53			9 759	22	54
		8			10 860	54	65			14 049	35	60			13 012	40	62
		10			13 576	85	71			17 561	55	66			16 265	62	67
	950	4	0.665	0.398	5 732	15	49	0.720	0.515	7 415	8	41	0.760	0.477	6 867	13	48
		6			8 598	35	59			11 122	18	51			10 301	30	58
		8			11 464	62	67			14 829	31	59			13 735	53	66
		10			14 330	97	73			18 536	49	65			17 168	83	71
	1000	4	0.700	0.419	6 034	15	49	0.758	0.542	7 805	8	41	0.800	0.502	7 229	13	48
		6			9 050	35	59			11 707	18	52			10 843	30	58
		8			12 067	62	67			15 610	31	59			14 458	53	66
		10			15 084	97	73			19 512	49	65			18 072	83	72
	1050	4	0.735	0.440	6 335	15	49	0.796	0.569	8 195	8	41	0.840	0.527	7 590	13	48
		6			9 503	35	60			12 293	18	52			11 385	30	59
		8			12 671	62	67			16 390	31	59			15 180	53	66
		10			15 838	97	73			20 488	49	65			18 976	83	72
	1100	4	0.770	0.461	6 637	15	49	0.834	0.596	8 585	8	42	0.880	0.552	7 952	13	48
		6			9 955	35	60			12 878	18	52			11 928	30	59
		8			13 274	62	67			17 171	31	60			15 903	53	66
		10			16 592	97	73			21 463	49	65			19 879	83	72
	1150	4	0.805	0.482	6 939	15	50	0.872	0.623	8 976	8	42	0.920	0.577	8 313	13	48
		6			10 408	35	60			13 463	18	52			12 470	30	59
		8			13 877	62	68			17 951	31	60			16 626	53	66
		10			17 347	97	73			22 439	49	66			20 783	83	72
	1200	4	0.840	0.503	7 240	15	50	0.910	0.650	9 366	8	42	0.960	0.602	8 675	13	49
		6			10 860	35	60			14 049	18	52			13 012	30	59
		8			14 481	62	68			18 732	31	60			17 349	53	67
		10			18 101	97	74			23 414	49	66			21 686	83	72
	1250	4	0.875	0.524	7 542	15	50	0.948	0.678	9 756	8	42	1.000	0.628	9 036	13	49
		6			11 313	35	60			14 634	18	53			13 554	30	59
		8			15 084	62	68			19 512	31	60			18 072	53	67
					18 855	97	74			24 390	49	66			22 590	83	73

11.6. technical parameters of mcr WIP PRO/V, mcr WIP PRO/V-M rectangular dampers

B – nominal width [mm]
H – nominal height [mm]

v – velocity [m/s]
Sk – duct cross-section [m²]
Se – damper active cross-section [m²]

Q – flow [m³/h]
dp – pressure drop [Pa]
L_{WA} – damper noise level [dB]

			height H [mm]														
			850					900					950				
		v [m/s]	Sk [m²]	Se [m²]	Q [m³/h]	dp [Pa]	L_{WA} [dB]	Sk [m²]	Se [m²]	Q [m³/h]	dp [Pa]	L_{WA} [dB]	Sk [m²]	Se [m²]	Q [m³/h]	dp [Pa]	L_{WA} [dB]
width B [mm]	110	4	0.097	0.064	927	12	38	0.099	0.064	927	13	39	0.105	0.064	927	14	40
		6			1 390	27	48			1 390	30	49			1 390	32	50
		8			1 853	49	56			1 853	53	57			1 853	57	58
		10			2 317	76	62			2 317	83	63			2 317	89	64
	150	4	0.132	0.088	1 264	12	39	0.135	0.088	1 264	13	40	0.143	0.088	1 264	14	41
		6			1 895	27	50			1 895	30	51			1 895	32	52
		8			2 527	49	57			2 527	53	58			2 527	57	59
		10			3 159	76	63			3 159	83	64			3 159	89	65
	200	4	0.176	0.117	1 685	12	40	0.180	0.117	1 685	13	41	0.190	0.117	1 685	14	42
		6			2 527	27	51			2 527	30	52			2 527	32	53
		8			3 370	49	58			3 370	53	59			3 370	57	60
		10			4 212	76	64			4 212	83	65			4 212	89	66
	250	4	0.220	0.146	2 106	12	41	0.225	0.146	2 106	13	42	0.238	0.146	2 106	14	43
		6			3 159	27	52			3 159	30	53			3 159	32	54
		8			4 212	49	59			4 212	53	60			4 212	57	61
		10			5 265	76	65			5 265	83	66			5 265	89	67
	300	4	0.264	0.176	2 527	12	42	0.270	0.176	2 527	13	43	0.285	0.176	2 527	14	44
		6			3 791	27	53			3 791	30	54			3 791	32	55
		8			5 054	49	60			5 054	53	61			5 054	57	62
		10			6 318	76	66			6 318	83	67			6 318	89	68
	350	4	0.308	0.205	2 948	12	43	0.315	0.205	2 948	13	44	0.333	0.205	2 948	14	45
		6			4 423	27	53			4 423	30	54			4 423	32	55
		8			5 897	49	61			5 897	53	62			5 897	57	63
		10			7 371	76	67			7 371	83	68			7 371	89	69
	400	4	0.352	0.234	3 370	12	43	0.360	0.234	3 370	13	44	0.380	0.234	3 370	14	45
		6			5 054	27	54			5 054	30	55			5 054	32	56
		8			6 739	49	61			6 739	53	62			6 739	57	63
		10			8 424	76	67			8 424	83	68			8 424	89	69
	450	4	0.396	0.263	3 791	12	44	0.405	0.263	3 791	13	45	0.428	0.263	3 791	14	46
		6			5 686	27	54			5 686	30	55			5 686	32	56
		8			7 582	49	62			7 582	53	63			7 582	57	64
		10			9 477	76	68			9 477	83	69			9 477	89	70
	500	4	0.441	0.293	4 212	12	44	0.450	0.293	4 212	13	45	0.475	0.293	4 212	14	46
		6			6 318	27	55			6 318	30	56			6 318	32	57
		8			8 424	49	62			8 424	53	63			8 424	57	64
		10			10 530	76	68			10 530	83	69			10 530	89	70
	550	4	0.485	0.322	4 633	12	45	0.495	0.322	4 633	13	46	0.523	0.322	4 633	14	47
		6			6 950	27	55			6 950	30	56			6 950	32	57
		8			9 266	49	63			9 266	53	64			9 266	57	65
		10			11 583	76	69			11 583	83	70			11 583	89	70
	600	4	0.529	0.351	5 054	12	45	0.540	0.351	5 054	13	46	0.570	0.351	5 054	14	47
		6			7 582	27	56			7 582	30	57			7 582	32	58
		8			10 109	49	63			10 109	53	64			10 109	57	65
		10			12 636	76	69			12 636	83	70			12 636	89	71
	650	4	0.573	0.380	5 476	12	45	0.585	0.380	5 476	13	46	0.618	0.380	5 476	14	47
		6			8 213	27	56			8 213	30	57			8 213	32	58
		8			10 951	49	63			10 951	53	65			10 951	57	65
		10			13 689	76	69			13 689	83	70			13 689	89	71

11.6. technical parameters of mcr WIP PRO/V, mcr WIP PRO/V-M rectangular dampers

B – nominal width [mm]
H – nominal height [mm]

v – velocity [m/s]
Sk – duct cross-section [m²]
Se – damper active cross-section [m²]

Q – flow [m³/h]
dp – pressure drop [Pa]
L_{WA} – damper noise level [dB]

			height H [mm]														
			850					900					950				
		v [m/s]	Sk [m²]	Se [m²]	Q [m³/h]	dp [Pa]	L_{WA} [dB]	Sk [m²]	Se [m²]	Q [m³/h]	dp [Pa]	L_{WA} [dB]	Sk [m²]	Se [m²]	Q [m³/h]	dp [Pa]	L_{WA} [dB]
width B [mm]	700	4	0.617	0.410	5 897	12	46	0.630	0.410	5 897	13	47	0.665	0.410	5 897	14	48
		6			8 845	27	56			8 845	30	57			8 845	32	58
		8			11 794	49	64			11 794	53	65			11 794	57	66
		10			14 742	76	70			14 742	83	71			14 742	89	72
	750	4	0.661	0.439	6 318	12	46	0.675	0.439	6 318	13	47	0.713	0.439	6 318	14	48
		6			9 477	27	57			9 477	30	58			9 477	32	59
		8			12 636	49	64			12 636	53	65			12 636	57	66
		10			15 795	76	70			15 795	83	71			15 795	89	72
	800	4	0.705	0.468	6 739	12	46	0.720	0.468	6 739	13	47	0.760	0.468	6 739	14	48
		6			10 109	27	57			10 109	30	58			10 109	32	59
		8			13 478	49	64			13 478	53	65			13 478	57	66
		10			16 848	76	70			16 848	83	71			16 848	89	72
	850	4	0.749	0.497	7 160	12	47	0.765	0.497	7 160	13	48	0.808	0.497	7 160	14	49
		6			10 741	27	57			10 741	30	58			10 741	32	59
		8			14 321	49	65			14 321	53	66			14 321	57	67
		10			17 901	76	70			17 901	83	71			17 901	89	72
	900	4	0.793	0.527	7 582	12	47	0.810	0.527	7 582	13	48	0.855	0.527	7 582	14	49
		6			11 372	27	57			11 372	30	58			11 372	32	59
		8			15 163	49	65			15 163	53	66			15 163	57	67
		10			18 954	76	71			18 954	83	72			18 954	89	73
	950	4	0.837	0.556	8 003	11	45	0.855	0.556	8 003	12	47	0.903	0.556	8 003	14	49
		6			12 004	24	56			12 004	26	57			12 004	32	60
		8			16 006	43	64			16 006	47	65			16 006	57	67
		10			20 007	68	69			20 007	74	70			20 007	89	73
	1000	4	0.881	0.585	8 424	11	46	0.900	0.585	8 424	12	47	0.950	0.585	8 424	14	49
		6			12 636	24	56			12 636	26	57			12 636	32	60
		8			16 848	43	64			16 848	47	65			16 848	57	67
		10			21 060	68	70			21 060	74	71			21 060	89	73
	1050	4	0.925	0.614	8 845	11	46	0.945	0.614	8 845	12	47	0.998	0.614	8 845	14	49
		6			13 268	24	56			13 268	26	58			13 268	32	60
		8			17 690	43	64			17 690	47	65			17 690	57	67
		10			22 113	68	70			22 113	74	71			22 113	89	73
	1100	4	0.969	0.644	9 266	11	46	0.990	0.644	9 266	12	47	1.045	0.644	9 266	14	50
		6			13 900	24	57			13 900	26	58			13 900	32	60
		8			18 533	43	64			18 533	47	65			18 533	57	68
		10			23 166	68	70			23 166	73	71			23 166	89	74
	1150	4	1.013	0.673	9 688	11	46	1.035	0.673	9 688	12	47	1.093	0.673	9 688	14	50
		6			14 531	24	57			14 531	26	58			14 531	32	60
		8			19 375	43	64			19 375	47	65			19 375	57	68
		10			24 219	68	70			24 219	74	71			24 219	89	74
	1200	4	1.057	0.702	10 109	11	47	1.080	0.702	10 109	12	48	1.140	0.702	10 109	14	50
		6			15 163	24	57			15 163	26	58			15 163	32	61
		8			20 218	43	65			20 218	47	66			20 218	57	68
		10			25 272	68	70			25 272	74	71			25 272	89	74
	1250	4	1.101	0.731	10 530	11	47	1.125	0.731	10 530	12	48	1.188	0.731	10 530	14	50
		6			15 795	24	57			15 795	26	58			15 795	32	61
		8			21 060	43	65			21 060	47	66			21 060	57	68
					26 325	68	71			26 325	74	72			26 325	89	74

11.6. technical parameters of mcr WIP PRO/V, mcr WIP PRO/V-M rectangular dampers

B – nominal width [mm]
H – nominal height [mm]

v – velocity [m/s]
Sk – duct cross-section [m²]
Se – damper active cross-section [m²]

Q – flow [m³/h]
dp – pressure drop [Pa]
L_{WA} – damper noise level [dB]

			height H [mm]														
			1000					1050					1100				
		v [m/s]	Sk [m²]	Se [m²]	Q [m³/h]	dp [Pa]	L_{WA} [dB]	Sk [m²]	Se [m²]	Q [m³/h]	dp [Pa]	L_{WA} [dB]	Sk [m²]	Se [m²]	Q [m³/h]	dp [Pa]	L_{WA} [dB]
width B [mm]	110	4	0.110	0.073	1 058	12	38	0.116	0.073	1 058	13	39	0.124	0.083	1 190	11	37
		6			1 587	27	49			1 587	29	49			1 784	24	48
		8			2 116	48	56			2 116	51	57			2 379	43	55
		10			2 645	76	62			2 645	79	63			2 974	67	61
	150	4	0.151	0.100	1 443	12	39	0.158	0.100	1 443	13	40	0.169	0.113	1 622	11	38
		6			2 164	27	50			2 164	29	51			2 433	24	49
		8			2 886	48	58			2 886	51	58			3 244	43	56
		10			3 607	76	63			3 607	79	64			4 055	67	62
	200	4	0.201	0.134	1 924	12	41	0.210	0.134	1 924	13	41	0.225	0.150	2 163	11	39
		6			2 886	27	51			2 886	29	52			3 244	24	50
		8			3 848	48	59			3 848	51	59			4 326	43	57
		10			4 810	76	65			4 810	79	65			5 407	67	63
	250	4	0.251	0.167	2 405	12	42	0.263	0.167	2 405	13	42	0.282	0.188	2 704	11	40
		6			3 607	27	52			3 607	29	53			4 055	24	51
		8			4 810	48	60			4 810	51	60			5 407	43	58
		10			6 012	76	66			6 012	79	66			6 759	67	64
	300	4	0.301	0.200	2 886	12	42	0.315	0.200	2 886	13	43	0.338	0.225	3 244	11	41
		6			4 329	27	53			4 329	29	54			4 866	24	51
		8			5 772	48	61			5 772	51	61			6 489	43	59
		10			7 214	76	66			7 214	79	67			8 111	67	65
	350	4	0.351	0.234	3 367	12	43	0.368	0.234	3 367	13	44	0.394	0.263	3 785	11	42
		6			5 050	27	54			5 050	29	54			5 678	24	52
		8			6 733	48	61			6 733	51	62			7 570	43	60
		10			8 417	76	67			8 417	79	68			9 463	67	65
	400	4	0.402	0.267	3 848	12	44	0.420	0.267	3 848	13	44	0.451	0.300	4 326	11	42
		6			5 772	27	54			5 772	29	55			6 489	24	53
		8			7 695	48	62			7 695	51	62			8 652	43	60
		10			9 619	76	68			9 619	79	68			10 814	67	66
	450	4	0.452	0.301	4 329	12	44	0.473	0.301	4 329	13	45	0.507	0.338	4 866	11	43
		6			6 493	27	55			6 493	29	55			7 300	24	53
		8			8 657	48	62			8 657	51	63			9 733	43	61
		10			10 822	76	68			10 822	79	69			12 166	67	67
	500	4	0.502	0.334	4 810	12	45	0.525	0.334	4 810	13	45	0.564	0.376	5 407	11	43
		6			7 214	27	55			7 214	29	56			8 111	24	54
		8			9 619	48	63			9 619	51	63			10 814	43	61
		10			12 024	76	69			12 024	79	69			13 518	67	67
	550	4	0.552	0.367	5 291	12	45	0.578	0.367	5 291	13	46	0.620	0.413	5 948	11	44
		6			7 936	27	56			7 936	29	56			8 922	24	54
		8			10 581	48	63			10 581	51	64			11 896	43	62
		10			13 226	76	69			13 226	79	70			14 870	67	67
	600	4	0.602	0.401	5 772	12	46	0.630	0.401	5 772	13	46	0.676	0.451	6 489	11	44
		6			8 657	27	56			8 657	29	57			9 733	24	54
		8			11 543	48	64			11 543	51	64			12 977	43	62
		10			14 429	76	69			14 429	79	70			16 222	67	68
	650	4	0.653	0.434	6 252	12	46	0.683	0.434	6 252	13	46	0.733	0.488	7 029	11	44
		6			9 379	27	56			9 379	29	57			10 544	24	55
		8			12 505	48	64			12 505	51	65			14 059	43	62
		10			15 631	76	70			15 631	79	70			17 573	67	68

11.6. technical parameters of mcr WIP PRO/V, mcr WIP PRO/V-M rectangular dampers

B – nominal width [mm]
H – nominal height [mm]

v – velocity [m/s]
Sk – duct cross-section [m²]
Se – damper active cross-section [m²]

Q – flow [m³/h]
dp – pressure drop [Pa]
L_{WA} – damper noise level [dB]

			height H [mm]														
			1000					1050					1100				
		v [m/s]	Sk [m²]	Se [m²]	Q [m³/h]	dp [Pa]	L_{WA} [dB]	Sk [m²]	Se [m²]	Q [m³/h]	dp [Pa]	L_{WA} [dB]	Sk [m²]	Se [m²]	Q [m³/h]	dp [Pa]	L_{WA} [dB]
width B [mm]	700	4	0.703	0.468	6 733	12	46	0.735	0.468	6 733	13	47	0.789	0.526	7 570	11	45
		6			10 100	27	57			10 100	29	57			11 355	24	55
		8			13 467	48	64			13 467	51	65			15 140	43	63
		10			16 834	76	70			16 834	79	71			18 925	67	68
	750	4	0.753	0.501	7 214	12	46	0.788	0.501	7 214	13	47	0.845	0.563	8 111	11	45
		6			10 822	27	57			10 822	29	58			12 166	24	55
		8			14 429	48	65			14 429	51	65			16 222	43	63
		10			18 036	76	70			18 036	79	71			20 277	67	69
	800	4	0.803	0.534	7 695	12	47	0.840	0.534	7 695	13	47	0.902	0.601	8 652	11	45
		6			11 543	27	57			11 543	29	58			12 977	24	56
		8			15 391	48	65			15 391	51	65			17 303	43	63
		10			19 238	76	71			19 238	79	71			21 629	67	69
	850	4	0.853	0.568	8 176	12	47	0.893	0.568	8 176	13	48	0.958	0.638	9 192	11	45
		6			12 264	27	58			12 264	29	58			13 788	24	56
		8			16 353	48	65			16 353	51	66			18 384	43	63
		10			20 441	76	71			20 441	79	72			22 981	67	69
	900	4	0.904	0.601	8 657	12	47	0.945	0.601	8 657	13	48	1.014	0.676	9 733	11	46
		6			12 986	27	58			12 986	29	58			14 599	24	56
		8			17 315	48	65			17 315	51	66			19 466	43	64
		10			21 643	76	71			21 643	79	72			24 332	67	70
	950	4	0.954	0.635	9 138	11	46	0.998	0.635	9 138	13	48	1.071	0.713	10 274	11	46
		6			13 707	24	57			13 707	29	59			15 411	24	57
		8			18 276	43	64			18 276	51	66			20 547	43	64
		10			22 846	67	70			22 846	79	72			25 684	67	70
	1000	4	1.004	0.668	9 619	11	46	1.050	0.668	9 619	13	48	1.127	0.751	10 814	11	47
		6			14 429	24	57			14 429	29	59			16 222	24	57
		8			19 238	43	64			19 238	51	66			21 629	43	65
		10			24 048	67	70			24 048	79	72			27 036	67	70
	1050	4	1.054	0.701	10 100	11	46	1.103	0.701	10 100	13	49	1.183	0.789	11 355	11	47
		6			15 150	24	57			15 150	29	59			17 033	24	57
		8			20 200	43	64			20 200	51	67			22 710	43	65
		10			25 250	67	70			25 250	79	72			28 388	67	71
	1100	4	1.104	0.735	10 581	11	47	1.155	0.735	10 581	13	49	1.240	0.826	11 896	11	47
		6			15 872	24	57			15 872	29	59			17 844	24	58
		8			21 162	43	65			21 162	51	67			23 792	43	65
		10			26 453	67	70			26 453	79	73			29 740	67	71
	1150	4	1.155	0.768	11 062	11	47	1.208	0.768	11 062	13	49	1.296	0.864	12 437	11	47
		6			16 593	24	57			16 593	29	60			18 655	24	58
		8			22 124	43	65			22 124	51	67			24 873	43	65
		10			27 655	67	71			27 655	79	73			31 091	67	71
	1200	4	1.205	0.802	11 543	11	47	1.260	0.802	11 543	13	49	1.352	0.901	12 977	11	47
		6			17 315	24	58			17 315	29	60			19 466	24	58
		8			23 086	43	65			23 086	51	67			25 955	43	65
		10			28 858	67	71			28 858	79	73			32 443	67	71
	1250	4	1.255	0.835	12 024	11	47	1.313	0.835	12 024	13	49	1.409	0.939	13 518	11	48
		6			18 036	24	58			18 036	29	60			20 277	24	58
		8			24 048	43	65			24 048	51	67			27 036	43	66
					30 060	67	71			30 060	79	73			33 795	67	71

11.6. technical parameters of mcr WIP PRO/V, mcr WIP PRO/V-M rectangular dampers

B – nominal width [mm]
H – nominal height [mm]

v – velocity [m/s]
Sk – duct cross-section [m²]
Se – damper active cross-section [m²]

Q – flow [m³/h]
dp – pressure drop [Pa]
L_{WA} – damper noise level [dB]

			height H [mm]														
			1150					1200					1250				
		v [m/s]	Sk [m²]	Se [m²]	Q [m³/h]	dp [Pa]	L_{WA} [dB]	Sk [m²]	Se [m²]	Q [m³/h]	dp [Pa]	L_{WA} [dB]	Sk [m²]	Se [m²]	Q [m³/h]	dp [Pa]	L_{WA} [dB]
width B [mm]	110	4	0.127	0.083	1 190	13	40	0.132	0.083	1 190	13	40	0.138	0.092	1 321	11	37
		6			1 784	29	50			1 784	30	51			1 982	24	48
		8			2 379	52	58			2 379	54	58			2 642	43	55
		10			2 974	81	63			2 974	84	64			3 303	66	61
	150	4	0.173	0.113	1 622	13	41	0.180	0.113	1 622	13	41	0.188	0.125	1 801	11	39
		6			2 433	29	52			2 433	30	52			2 702	24	49
		8			3 244	52	59			3 244	54	59			3 603	43	57
		10			4 055	81	65			4 055	84	65			4 504	66	63
	200	4	0.230	0.150	2 163	13	42	0.240	0.150	2 163	13	42	0.250	0.167	2 402	11	39
		6			3 244	29	52			3 244	30	53			3 603	24	50
		8			4 326	52	60			4 326	54	60			4 804	43	57
		10			5 407	81	66			5 407	84	66			6 005	66	63
	250	4	0.288	0.188	2 704	13	43	0.300	0.188	2 704	13	43	0.313	0.209	3 002	11	40
		6			4 055	29	53			4 055	30	54			4 504	24	51
		8			5 407	52	61			5 407	54	61			6 005	43	58
		10			6 759	81	67			6 759	84	67			7 506	66	64
	300	4	0.345	0.225	3 244	13	43	0.360	0.225	3 244	13	44	0.375	0.250	3 603	11	41
		6			4 866	29	54			4 866	30	54			5 404	24	51
		8			6 489	52	61			6 489	54	62			7 206	43	59
		10			8 111	81	67			8 111	84	68			9 007	66	65
	350	4	0.403	0.263	3 785	13	44	0.420	0.263	3 785	13	45	0.438	0.292	4 203	11	41
		6			5 678	29	55			5 678	30	55			6 305	24	52
		8			7 570	52	62			7 570	54	63			8 407	43	60
		10			9 463	81	68			9 463	84	68			10 508	66	65
	400	4	0.460	0.300	4 326	13	45	0.480	0.300	4 326	13	45	0.500	0.334	4 804	11	42
		6			6 489	29	55			6 489	30	56			7 206	24	53
		8			8 652	52	63			8 652	54	63			9 608	43	60
		10			10 814	81	69			10 814	84	69			12 010	66	66
	450	4	0.518	0.338	4 866	13	45	0.540	0.338	4 866	13	46	0.563	0.375	5 404	11	43
		6			7 300	29	56			7 300	30	56			8 106	24	53
		8			9 733	52	63			9 733	54	64			10 809	43	61
		10			12 166	81	69			12 166	84	70			13 511	66	66
	500	4	0.575	0.376	5 407	13	46	0.600	0.376	5 407	13	46	0.625	0.417	6 005	11	43
		6			8 111	29	56			8 111	30	57			9 007	24	54
		8			10 814	52	64			10 814	54	64			12 010	43	61
		10			13 518	81	70			13 518	84	70			15 012	66	67
	550	4	0.633	0.413	5 948	13	46	0.660	0.413	5 948	13	47	0.688	0.459	6 605	11	43
		6			8 922	29	57			8 922	30	57			9 908	24	54
		8			11 896	52	64			11 896	54	65			13 211	43	62
		10			14 870	81	70			14 870	84	70			16 513	66	67
	600	4	0.690	0.451	6 489	13	46	0.720	0.451	6 489	13	47	0.750	0.500	7 206	11	44
		6			9 733	29	57			9 733	30	57			10 809	24	54
		8			12 977	52	65			12 977	54	65			14 412	43	62
		10			16 222	81	70			16 222	84	71			18 014	66	68
	650	4	0.748	0.488	7 029	13	47	0.780	0.488	7 029	13	47	0.813	0.542	7 806	11	44
		6			10 544	29	57			10 544	30	58			11 709	24	55
		8			14 059	52	65			14 059	54	65			15 612	43	62
		10			17 573	81	71			17 573	84	71			19 516	66	68

11.6. technical parameters of mcr WIP PRO/V, mcr WIP PRO/V-M rectangular dampers

B – nominal width [mm]
H – nominal height [mm]

v – velocity [m/s]
Sk – duct cross-section [m²]
Se – damper active cross-section [m²]

Q – flow [m³/h]
dp – pressure drop [Pa]
L_{WA} – damper noise level [dB]

			height H [mm]														
			1150					1200					1250				
		v [m/s]	Sk [m²]	Se [m²]	Q [m³/h]	dp [Pa]	L_{WA} [dB]	Sk [m²]	Se [m²]	Q [m³/h]	dp [Pa]	L_{WA} [dB]	Sk [m²]	Se [m²]	Q [m³/h]	dp [Pa]	L_{WA} [dB]
width B [mm]	700	4	0.805	0.526	7 570	13	47	0.840	0.526	7 570	13	48	0.875	0.584	8 407	11	44
		6			11 355	29	58			11 355	30	58			12 610	24	55
		8			15 140	52	65			15 140	54	66			16 813	43	63
		10			18 925	81	71			18 925	84	71			21 017	66	68
	750	4	0.863	0.563	8 111	13	47	0.900	0.563	8 111	13	48	0.938	0.626	9 007	11	45
		6			12 166	29	58			12 166	30	58			13 511	24	55
		8			16 222	52	65			16 222	54	66			18 014	43	63
		10			20 277	81	71			20 277	84	72			22 518	66	69
	800	4	0.920	0.601	8 652	13	48	0.960	0.601	8 652	13	48	1.000	0.667	9 608	11	45
		6			12 977	29	58			12 977	30	59			14 412	24	56
		8			17 303	52	66			17 303	54	66			19 215	43	63
		10			21 629	81	72			21 629	84	72			24 019	66	69
	850	4	0.978	0.638	9 192	13	48	1.020	0.638	9 192	13	48	1.063	0.709	10 208	11	45
		6			13 788	29	59			13 788	30	59			15 312	24	56
		8			18 384	52	66			18 384	54	66			20 416	43	63
		10			22 981	81	72			22 981	84	72			25 520	66	69
	900	4	1.035	0.676	9 733	13	48	1.080	0.676	9 733	13	49	1.125	0.751	10 809	11	46
		6			14 599	29	59			14 599	30	59			16 213	24	56
		8			19 466	52	66			19 466	54	67			21 617	43	64
		10			24 332	81	72			24 332	84	73			27 022	66	69
	950	4	1.093	0.713	10 274	12	47	1.140	0.713	10 274	13	49	1.188	0.792	11 409	11	47
		6			15 411	26	58			15 411	30	60			17 114	24	57
		8			20 547	46	65			20 547	54	67			22 818	43	65
		10			25 684	72	71			25 684	84	73			28 523	66	71
	1000	4	1.150	0.751	10 814	12	48	1.200	0.751	10 814	13	50	1.250	0.834	12 010	11	47
		6			16 222	26	58			16 222	30	60			18 014	24	58
		8			21 629	46	66			21 629	54	68			24 019	43	65
		10			27 036	72	72			27 036	84	73			30 024	66	71
	1050	4	1.208	0.789	11 355	12	48	1.260	0.789	11 355	13	50	1.313	0.876	12 610	11	47
		6			17 033	26	58			17 033	30	60			18 915	24	58
		8			22 710	46	66			22 710	54	68			25 220	43	65
		10			28 388	72	72			28 388	84	74			31 525	66	71
	1100	4	1.265	0.826	11 896	12	48	1.320	0.826	11 896	13	50	1.375	0.917	13 211	11	47
		6			17 844	26	59			17 844	30	61			19 816	24	58
		8			23 792	46	66			23 792	54	68			26 421	43	65
		10			29 740	72	72			29 740	84	74			33 026	66	71
	1150	4	1.323	0.864	12 437	12	48	1.380	0.864	12 437	13	50	1.438	0.959	13 811	11	48
		6			18 655	26	59			18 655	30	61			20 717	24	58
		8			24 873	46	66			24 873	54	68			27 622	43	66
		10			31 091	72	72			31 091	84	74			34 528	66	71
	1200	4	1.380	0.901	12 977	12	48	1.440	0.901	12 977	13	50	1.500	1.001	14 412	11	48
		6			19 466	26	59			19 466	30	61			21 617	24	58
		8			25 955	46	66			25 955	54	68			28 823	43	66
		10			32 443	72	72			32 443	84	74			36 029	66	72
	1250	4	1.438	0.939	13 518	12	49	1.500	0.939	13 518	13	51	1.563	1.043	15 012	11	48
		6			20 277	26	59			20 277	30	61			22 518	24	59
		8			27 036	46	67			27 036	54	69			30 024	43	66
					33 795	72	72			33 795	84	74			37 530	66	72

The mcr WIP PRO fire damper selection program is available at **www.mercor.com.pl**, in the Designer Zone.

11.7. estimated weights of mcr WIP PRO/V, mcr WIP PRO/V-M dampers [kg]

		height H [mm]										
		263	300	400	500	600	700	800	900	1000	1100	1250
width B [mm]	110	3	3	4	5	7	8	9	10	11	13	14
	150	4	4	6	8	9	11	12	14	16	17	20
	200	5	6	8	10	12	15	17	19	21	23	27
	250	7	8	12	13	16	18	21	24	27	29	33
	300	8	9	12	16	19	22	25	29	32	35	40
	350	9	11	15	18	22	26	30	34	37	41	47
	400	11	12	17	21	25	30	34	38	43	47	54
	500	14	16	21	27	32	37	43	48	54	59	67
	600	16	19	25	32	38	45	51	58	64	71	81
	700	19	22	30	37	45	52	60	68	75	83	94
	800	22	25	34	43	51	60	69	77	86	95	108
	900	25	29	38	48	58	68	77	87	97	106	122
	1000	28	33	42	53	65	76	85	97	108	117	136
	1100	31	37	46	58	72	84	93	107	119	128	150
	1250	34	41	50	63	79	92	101	117	130	139	164

The table shows the weights of dampers with RST-KW1 trigger control mechanisms or actuators.

11.8. accessories

11.8.1. mcr KRP connection pipe

The mcr KRP connection pipes are used to connect a circular ventilation duct to a rectangular damper. The connection is a „bare end" pipe. The diameter of the pipe is 2 mm smaller than the diameter of the ventilation duct.

Dimensions:

BxH - damper dimensions [mm]

ØD - diameter of the connection duct [mm]

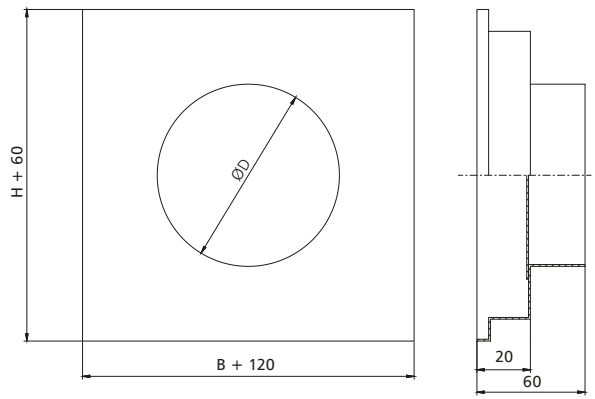

11.9. marking

mcr WIP PRO/V / B x H / 1 / 2 / 3

- additional parameters
- material
- control
- width x height (nominal)
- damper type

1 – control:

– Belimo trigger control mechanism
BE24 – actuator without a return spring, U = 24 V AC/DC
BE24-ST (with the BKE230-24 option) – actuator without a return spring, for the SBS Control system
BE230 – actuator without a return spring, U = 230 V AC/DC
BLE24 – actuator without a return spring, U = 24 V AC/DC
BLE24-ST (with the BKE230-24 option) – actuator without a return spring, for the SBS Control system
BLE230 – actuator without a return spring, U = 230 V AC/DC

2 – material:

[no symbol] – galvanised steel, Zn 275 g/m^2 coating
KN – stainless steel
KK – 1.4404 acid-proof steel

3 – additional parameters:

Axis of rotation of the damper
[no symbol] – horizontal axis of rotation
PP – vertical axis of rotation
PP_D – vertical axis of rotation - mechanism at the bottom of the damper
PP_G – vertical axis of rotation - mechanism at the top of the damper

Manufacture standard (see chapter 14.2 of this Catalogue)
[no symbol] – left damper
KP – right damper

Note: the additional parameters to be entered preceded by the "/" sign

example marking:

mcr WIP PRO/V 400 x 400 BLE24

Louvered smoke ventilation damper EIS120 with a compact 24 V Belimo actuator with limit switches.

Chapter 13 - power supply and control (p. 203) contains:
- technical specifications and connection diagrams for the trigger control mechanisms supporting the damper.

Chapter 14 - additional information (p. 210) contains:
- location of trigger control mechanisms in relation to the damper - production standards,
- table for quick selection of dampers, depending on fire separation and its thickness,
- installation distances: damper-ceiling, damper-wall, damper-damper.

PRODUCT CONFIGURATOR AND CAD MODELS/BIM AT WWW.MERCOR.COM.PL IN THE DESIGNER'S ZONE

BIM CAD

CE 0832-CPR-P0001

LPCB UKAS

- E120
- **Certificate of constancy of performance 0832-CPR-P0001.**
- **Dampers certified for compliance with EN 15650.**
- **Dampers qualified under EN 13501-3 and tested under EN 1366-2.**
- **Narrow cut-off dampers with a stainless steel curtain with a large active surface.**

12.1. application

The mcr FS fire dampers with a thermal trigger are used in vertical construction partitions to allow the air to flow through. The purpose of the dampers is to maintain the fire resistance of the partition, in which they are installed.

During normal operation, the dampers remain open. The dampers switch to safe mode (close):
- automatically, by the thermal trigger tripping at 72°C,
- manually (in test mode), by pressing the manual release button (trigger control mechanism),
- remotely, by the EM electromagnetic trigger tripping (optional).

Dampers with EM electromagnetic triggers (optional) close as a result of power supply cut-off due to the action of return springs in the damper. The dampers open upon the application of the power supply to trigger terminals and upon manual lifting of the steel curtain.

Dampers with a thermal trigger control mechanism close as a result of the action of the drive spring in the damper, activated by the triggering of the thermal trigger or manually, by pressing the dedicated button on the panel. The dampers are opened manually, by lifting the steel curtain and locking it in the trigger control mechanism clamps.

The mcr FS dampers used in the systems protecting escape routes from smoke remain open during the fire, which ensure the supply of fresh air to escape routes. If the fire develops further, the dampers are automatically closed as a result of thermal trigger tripping to prevent the spreading of fire.

12.2. design

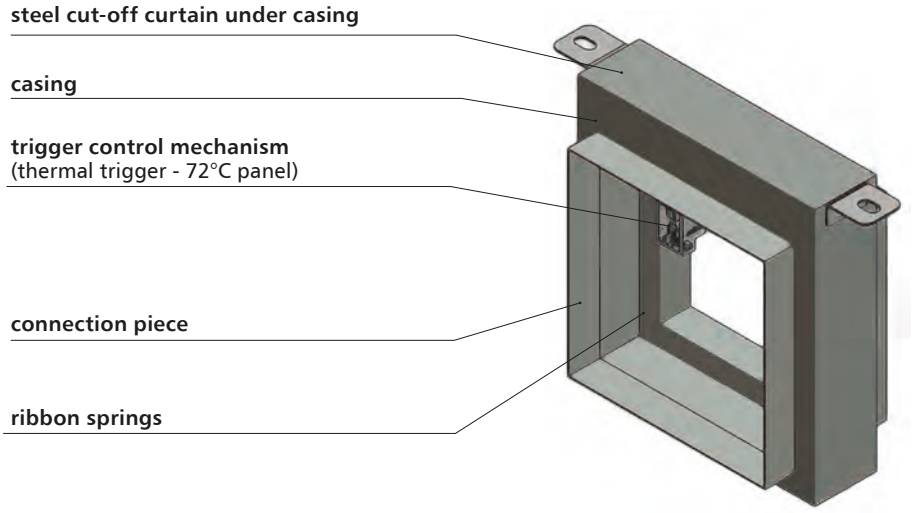

The mcr FS dampers consist of a double casing with a rectangular cross section, a moving blade in the form of a falling foldable curtain and a trigger control mechanism (panel), which is activated remotely or automatically when the thermal trigger is tripped. The damper casing is made of galvanised steel sheet. The casing total length is 90 mm for rectangular dampers and 92 mm for circular dampers. On two sides, each damper is equipped with a connection piece with the length of 38 mm for rectangular dampers and 60 mm for circular dampers. The damper curtain is made of stainless steel sheet. The steel flat bar on casing exterior is installed to tighten the device after its activation.

The mechanism of the mcr FS dampers, which moves the curtain, consists of two ribbon springs, placed inside of the damper sides, along its height. If the allowed temperature is exceeded in the casing, the trigger control mechanism is triggered and the spring-powered curtain is lowered. It is possible to equip the damper with an EM mechanism for remote control.

12.3. versions

12.3.1. mcr FS I/F – cut-off fire damper for E120(ve ho i↔o) rigid walls and ceilings

insert symmetrically in relation to the axis of the wall

The mcr FS I/F damper is suitable for installation in rigid walls.

The cut-off curtain of stainless steel falls when the temperature of 72°C is exceeded or if the voltage is removed from the EM trigger control mechanism (optional).

The damper may be equipped with a MSSP curtain closing limit switch or a MSDP curtain closing and opening limit switch.

12.3.2. mcr FS DWFX-C – cut-off damper for E120(ve i↔o) lightweight walls

insert symmetrically in relation to the axis of the wall

The mcr FS DWFX-C damper is suitable for installation in newly constructed lightweight walls.

The cut-off curtain of stainless steel falls when the temperature of 72°C is exceeded or if the voltage is removed from the EM trigger control mechanism (optional).

The damper may be equipped with a MSSP curtain closing limit switch or a MSDP curtain closing and opening limit switch.

12.4. dimensions

The mcr FS dampers are manufactured in three series:

101 series (rectangular dampers) with a curtain partly in the air stream – from 100x100 mm to 1250x1000 mm.

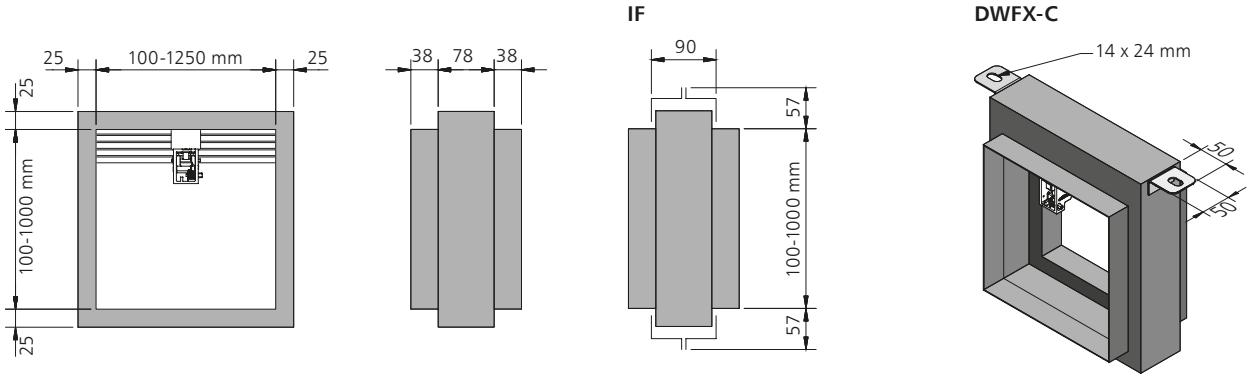

201 series (rectangular dampers) with a curtain outside the air stream – from 100x250 mm to 1250x1000 mm.

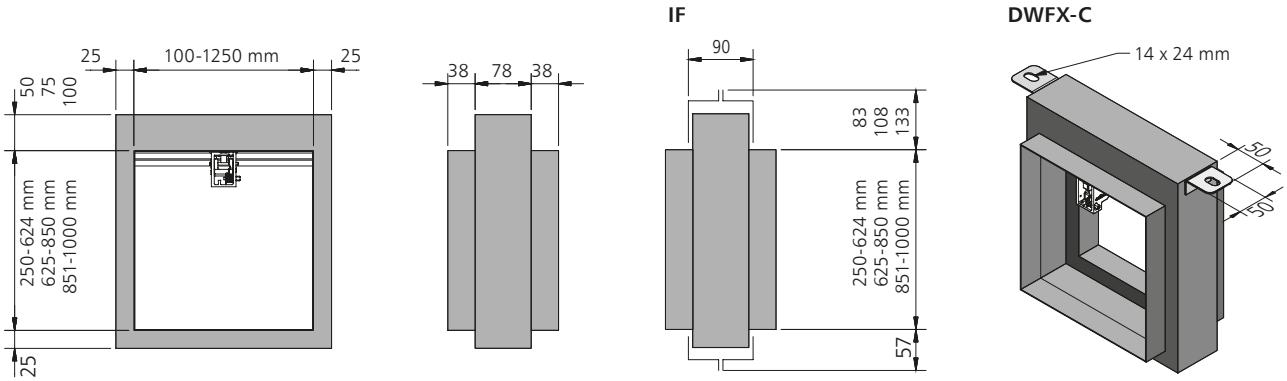

301 series (circular dampers) with a curtain outside the air flow – from D100 to D1000 mm.

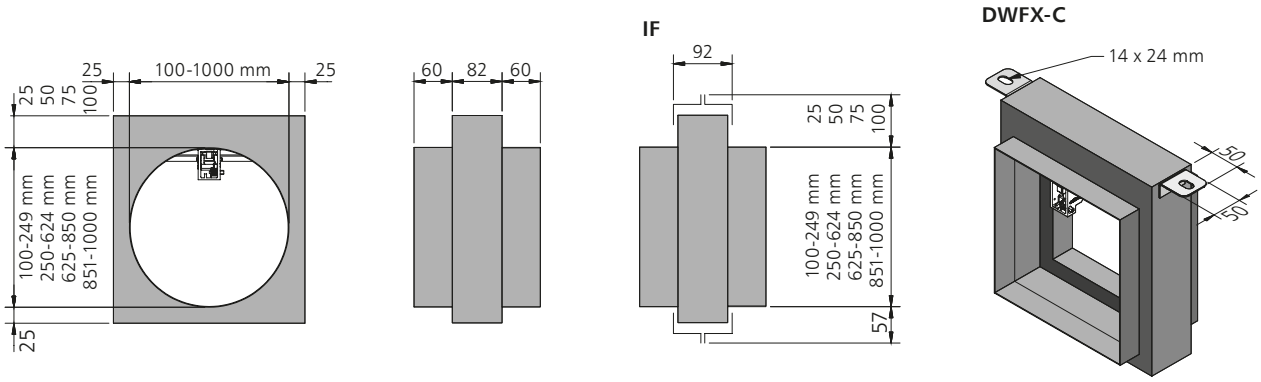

Apart from the standard dimensions, fire dampers may be manufactured with intermediate dimensions (in 1 mm increments, in the given range).

12.5. installation

The mcr FS I/F dampers are E120(ve ho i↔o)-rated when installed in concrete partitions, partitions made of full bricks or cellular concrete blocks with the thickness of at least 110 mm and concrete ceilings with the thickness of at least 150 mm.

The mcr FS DWFX-C dampers are E120(ve i↔o)-rated if installed in lightweight walls of cardboard-plaster panels, on a steel framework with the thickness of at least 125 mm.

12.5.1. preparation of installation openings

mcr FS I/F version

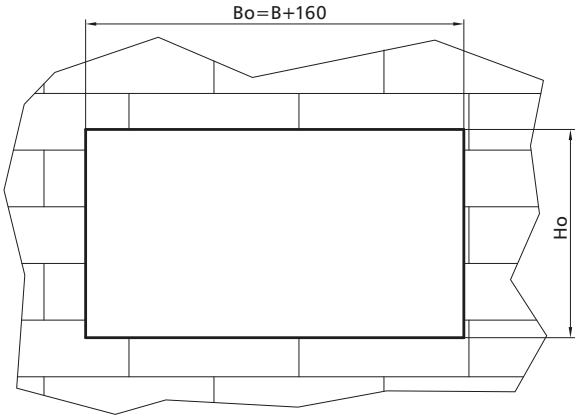

Ho = H + 160* for mcr FS 101 I/F
Ho = H + 180* for mcr FS 201 I/F 250 - 624 mm
Ho = H + 205* for mcr FS 201 I/F 625 - 850 mm
Ho = H + 230* for mcr FS 201 I/F 851 - 1000 mm
* applies also to mcr FS 301 I/F

mcr FS DWFX-C version

The dampers are installed during the construction of the gypsum board wall (the damper is embedded in the wall of panels).

12.5.2. sample installation of mcr FS I/F dampers

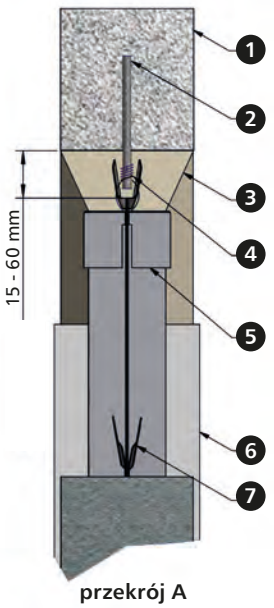

przekrój A

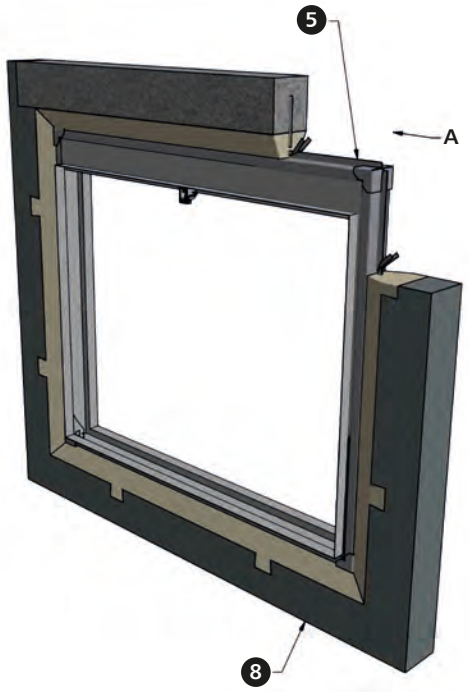

1. lintel
2. steel anchors Ø min. 6.5 mm
3. 4:1 sand-cement mortar
4. steel wire Ø 1.5 mm binding the anchors with frame runners
5. installation frame
6. mcr FS damper
7. frame runners - for bending sideways and downwards
8. rigid partition

12.5.3. sample installation of mcr FS DWFX-C dampers

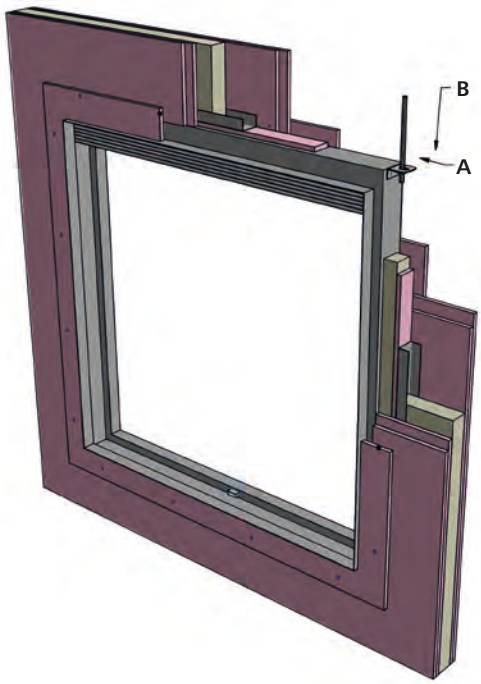

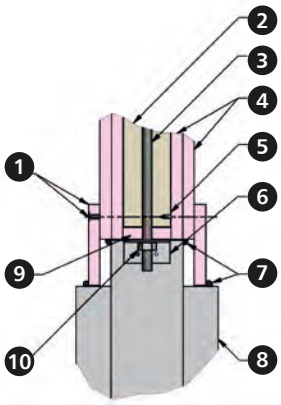

cross-section A

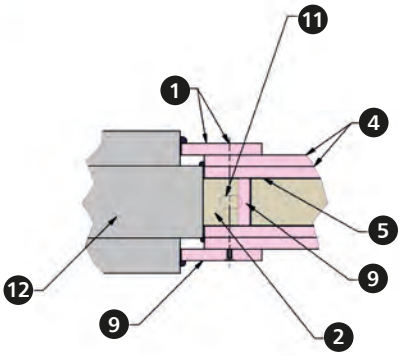

cross-section B

1. 12.5 x 100 mm circumferential gypsum board trim fixed to the gypsum board wall through the UD50 profile with 300 mm screws
2. mineral wool 33 kg/m^3
3. M10 rod (pin)
4. gypsum board panels 2 x 12.5 mm
5. UD50 profile
6. angle bar welded to both ends of the casing
7. low-expansion intumescent compound around the damper, on both sides
8. damper casing
9. gypsum board trim 12.5 mm
10. M10 nut
11. angle bar with an opening
12. mcr FS damper

12.6. technical parameters of mcr FS curtain dampers

damper active surface in relation to the B and H nominal and Bz and Hz total dimensions

101 series														
H \ B	100	200	300	400	500	600	700	800	900	1000	1100	1200	1250	
100	0.01	0.02	0.03	0.04	0.05	0.06	0.07	0.08	0.09	0.10	0.11	0.12	0.13	150
200	0.02	0.04	0.06	0.08	0.10	0.12	0.14	0.16	0.18	0.20	0.22	0.24	0.25	250
300	0.03	0.06	0.09	0.12	0.15	0.18	0.21	0.24	0.27	0.30	0.33	0.36	0.37	350
400	0.03	0.07	0.11	0.15	0.19	0.23	0.27	0.31	0.35	0.39	0.43	0.47	0.49	450
500	0.04	0.09	0.14	0.19	0.24	0.29	0.34	0.39	0.44	0.49	0.54	0.59	0.62	550
600	0.05	0.11	0.17	0.23	0.29	0.35	0.41	0.47	0.53	0.59	0.65	0.71	0.74	650
700	0.05	0.12	0.19	0.26	0.33	0.40	0.47	0.54	0.61	0.68	0.75	0.82	0.85	750
800	0.04	0.12	0.20	0.28	0.36	0.44	0.52	0.60	0.68	0.76	0.84	0.92	0.96	850
900	0.04	0.13	0.22	0.31	0.40	0.49	0.58	0.67	0.76	0.85	0.94	1.03	1.07	950
1000	0.03	0.13	0.23	0.33	0.43	0.53	0.63	0.73	0.83	0.93	1.03	1.13	1.18	1050
	150	**250**	**350**	**450**	**550**	**650**	**750**	**850**	**950**	**1050**	**1150**	**1250**	**1300**	Bz \ Hz

201 series														
H \ B	100	200	300	400	500	600	700	800	900	1000	1100	1200	1250	
250	0.03	0.05	0.08	0.10	0.13	0.15	0.18	0.20	0.23	0.25	0.28	0.30	0.31	325
300	0.03	0.06	0.09	0.12	0.15	0.18	0.21	0.24	0.27	0.30	0.33	0.36	0.38	375
400	0.04	0.08	0.12	0.16	0.20	0.24	0.28	0.32	0.36	0.40	0.44	0.48	0.50	475
500	0.05	0.10	0.15	0.20	0.25	0.30	0.35	0.40	0.45	0.50	0.55	0.60	0.63	575
600	0.06	0.12	0.18	0.24	0.30	0.36	0.42	0.48	0.54	0.60	0.66	0.72	0.75	675
700	0.07	0.14	0.21	0.28	0.35	0.42	0.49	0.56	0.63	0.70	0.77	0.84	0.88	800
800	0.08	0.16	0.24	0.32	0.40	0.48	0.56	0.64	0.72	0.80	0.88	0.96	1.00	900
900	0.09	0.18	0.27	0.36	0.45	0.54	0.63	0.72	0.81	0.90	0.99	1.08	1.13	1025
1000	0.10	0.20	0.30	0.40	0.50	0.60	0.70	0.80	0.90	1.00	1.10	1.20	1.25	1125
	150	**250**	**350**	**450**	**550**	**650**	**750**	**850**	**950**	**1050**	**1150**	**1250**	**1300**	Bz \ Hz

301 series										
D	100	200	300	400	500	600	700	800	900	1000
active surface	0.01	0.03	0.07	0.13	0.20	0.28	0.38	0.50	0.64	0.79
Hz	150	250	375	475	575	675	800	900	1025	1125
Bz	150	250	350	450	550	650	750	850	950	1050

The mcr FS fire damper selection program is available at **www.mercor.com.pl**, in the Designer Zone.

12.6.1. flow characteristics

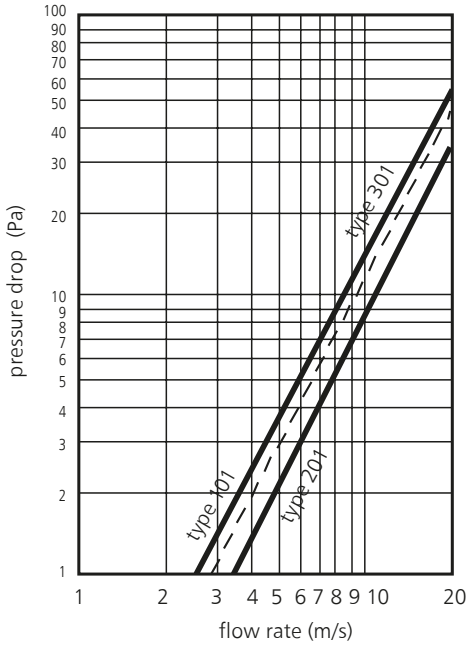

pressure drop (Pa) and flow rate (m/s)

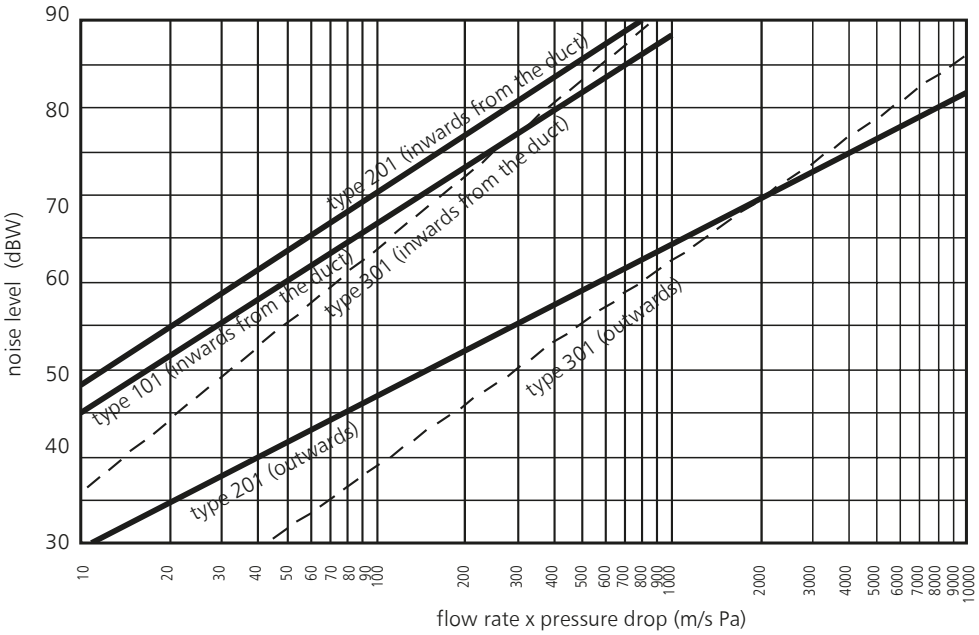

flow rate (m/s) x pressure drop (Pa) and noise level (dBW)

acoustic power spectrum for mcr FS dampers (outside)

frequency	Hz	63	125	250	500	1k	2k	3k	4k
type 101	dB	10	7	3	9	13	20	30	33
type 201	dB	10	7	3	9	13	20	30	33
type 301	dB	13	10	3	7	11	12	26	42

acoustic power spectrum for mcr FS dampers (inside the duct)

frequency	Hz	63	125	250	500	1k	2k	3k	4k
type 101	dB	4	12	16	18	22	20	32	38
type 201	dB	4	11	17	19	22	30	33	40
type 301	dB	4	10	16	18	21	24	30	38

12.7. weights of mcr FS curtain dampers

approximate weights of dampers [kg]																			
active opening dimensions Ø(mm)	100	150	200	250	300	350	400	450	500	550	600	650	700	750	800	850	900	950	1000
101 series/DWFX-C	1.6	2.1	2.8	3.5	4.2	5.0	5.7	6.9	7.5	8.6	9.5	10.9	12.0	13.1	13.8	15.2	16.7	18.1	19.0
101 series/ I/F	3.8	4.6	5.7	6.8	8.0	9.2	10.7	11.8	12.9	14.1	15.8	17.9	19.1	20.2	21.4	23.3	25.2	27.4	29.2
201 series/DWFX-C	-	-	-	4.1	4.6	5.4	6.0	7.1	8.0	9.3	10.5	12.1	12.7	14.4	16.0	17.5	19.0	20.5	22.0
201 series/ I/F	-	-	-	7.4	8.5	9.6	10.4	12.6	13.8	15.3	16.8	18.0	20.3	21.7	23.6	25.5	27.6	29.8	31.0
301 series/DWFX-C	2.3	3.0	4.0	5.4	6.5	7.6	8.8	10.2	11.7	13.2	14.9	16.9	18.7	20.5	22.4	24.5	26.7	28.8	31.0
301 series/ I/F	4.4	5.5	6.9	9.0	10.4	11.7	13.6	15.5	16.5	18.5	20.3	22.2	42.5	27.8	30.4	32.8	35.2	38.9	42.0

12.8. options

12.8.1. EM trigger control mechanism

mechanism operation description:

The EM mechanism is designed to operate mcr FS transfer dampers. After the removal of the power supply voltage the mechanism lock is released, which causes in the steel cord movement and damper operation. The mechanism is not equipped with a drive (return) spring. That spring is installed directly on the damper.

versions:

EM24 – mechanism supplied with the voltage of 24 V AC/DC – released by the removal of the power supply voltage

EM240 – mechanism supplied with the voltage of 230 V AC – released by the removal of the power supply voltage

specifications

	EM24	EM240
power supply voltage	24 V AC / DC	230 V AC 50 Hz
rated current	120 m A	10 m A
electrical connection	wire 3 x 0.75 mm^2	
weight	1.6 kg	1.6 kg

electrical diagram of the mechanism

power supply

brown lead – „+" supply or „L"
blue lead – mass „-" or „N"
green-yellow lead – ground „E"

24 V AC/DC

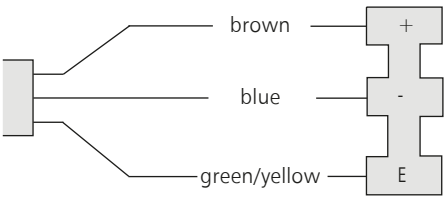

230 V AC

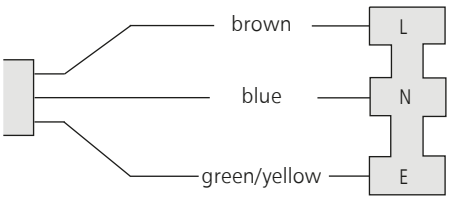

mechanism dimensions

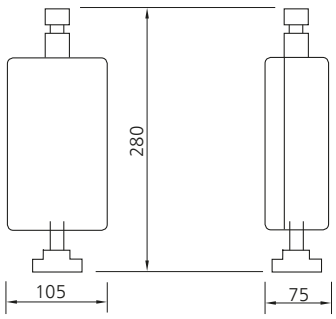

12.8.2. mechanism dimensions MSSP and MSDP independent limit switches

operation description:

The limit switch is used to signal the position of the fire damper partition.

versions:

MSSP – single switch – closed partition damper signaling.

MSDP – assembly of two switches – closed and open partition damper signaling.

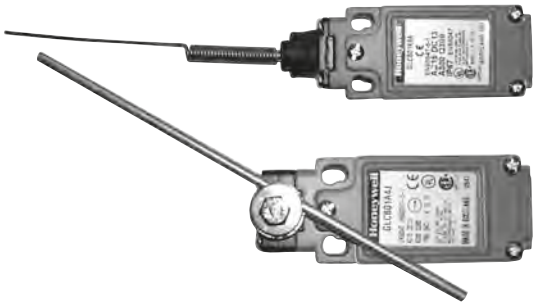

specifications

MSSP and MSDP limit switch	1NO/1NC SPDT (switching contact)
limit switch operating temperature	-25°C to +85°C
service durability	5 000 000 cycles
voltage	300 V AC and 250 V DC
current	10 A
head version	"cat whiskers" or "steel rod"
ingress protection rating	IP 66

electrical diagram of the mechanism

MSSP – single limit switch, closed damper signaling:

MSDP – two limit switches:

- NO (normally open) contacts 13 and 14
- NC (normally closed) contacts 21 and 22

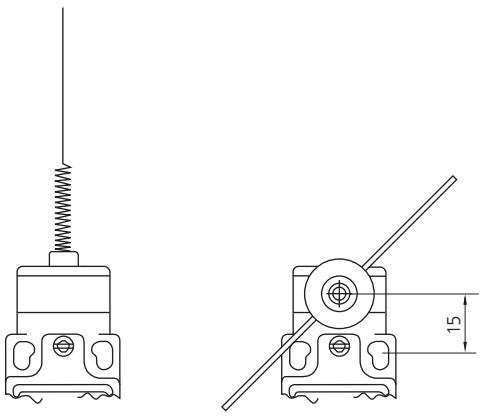

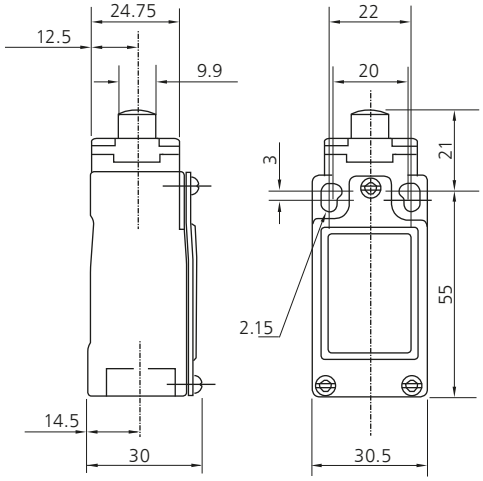

12.9. marking

mcr FS 201 / IF / B x H / MSSP

- accessories
- active opening dimensions
- damper type

type:

mcr FS 101 - square or rectangular damper with a curtain partly in the air stream
mcr FS 201 - square or rectangular damper with a curtain outside the air stream
mcr FS 301 - circular damper with a curtain outside the air stream
+ IF - installation frame for rigid partitions
+ DWFX-C - frame for installation before the assembly of dry partition walls

accessories:

MSSP - single limit switch (closed damper signaling)
MSDP - two single limit switches (closed and open damper signalling)
EM24 - electromagnetic trigger (power supply voltage of 24V AC/DC)
EM240 - electromagnetic trigger (power supply voltage of 230 V AC)
MKPZ - masking cover x 1 front, x 2 front and rear

13.1. cooperation with smoke exhaust/cut-off dampers - drive quick selection table

	mcr FID S/S c/P	mcr FID S/S p/P mcr FID S/S p/O	mcr FID S/V p/P mcr FID S/V-M p/P	mcr FID PRO	mcr WIP/S	mcr WIP/T	mcr WIP/T-G	mcr WIP/V mcr WIP/V-M	mcr WIP PRO/S mcr WIP PRO/T	mcr WIP PRO/V mcr WIP PRO/V-M
BF24-T (-ST)		x			x	x			x	
BF230-T		x			x	x			x	
BFL24-T (-ST)	x	x		x	x	x			x	
BFL230-T	x	x		x	x	x			x	
BFN24-T (-ST)	x	x			x	x			x	
BFN230-T	x	x			x	x			x	
BE24			x			x	x	x		x
BE230			x			x	x	x		x
BLE24			x			x	x	x		x
BLE230			x			x	x	x		x
EXBF24-T	x	x		x	x	x			x	
EXBF230-T	x	x		x	x	x			x	
BF24TL-T (-ST)	x	x		x	x	x			x	
RST	x	x		x						
RST/WK1	x	x		x						
RST/WK2	x	x		x						
RST-KW1/S	x	x		x						
RST-KW1/S/WK2	x	x		x	x	x	x		x	
RST-KW1/24I	x	x		x						
RST-KW1/24P	x	x		x					x	
RST-KW1/230I	x	x		x						
RST-KW1/230P	x	x		x					x	
BF24 (-ST)							x			
BF230							x			
BLF24 (-ST)							x			
BLF230							x			
BFL24 (-ST)							x			
BFL230							x			
BFN24 (-ST)							x			
BFN230							x			

13.2. actuators

13.2.1. BF electric actuators

Specifications	BF24 (BF24-T)	BF230 (BF230-T)
power supply	AC 24 V 50/60 Hz DC 24 V	AC 220-240 V 50/60 Hz
power demand: - for spring tensioning - for holding	 7 W 2 W	 8 W 3 W
sizing (apparent power)	10 VA	11 VA
protection class	III	II
ingress protection rating	IP 54	IP 54
auxiliary circuit breaker:	2 x EPU 3 (0.5) A 250 V	2 x EPU 3 (0.5) A 250 V~
- activation position	5°, 80°	5°, 80°
torque: - motor - return spring	 18 Nm 12 Nm	 18 Nm 12 Nm
cable connection: - motor (length: 0.9 m) - auxiliary circuit breaker	 2 x 0.75 mm^2 6 x 0.75 mm^2	 2 x 0.75 mm^2 6 x 0.75 mm^2
movement time (0-90°): - motor - return spring	 120 s ~16 s	 120 s ~16 s
operating temperature range	-30 ... +50°C	-30 ... +50°C
sound intensity level: - motor - return spring	 max 45 dB (A) ~63 dB (A)	 max 45 dB (A) ~63 dB (A)

electrical diagram of the BF ...-T series actuator:

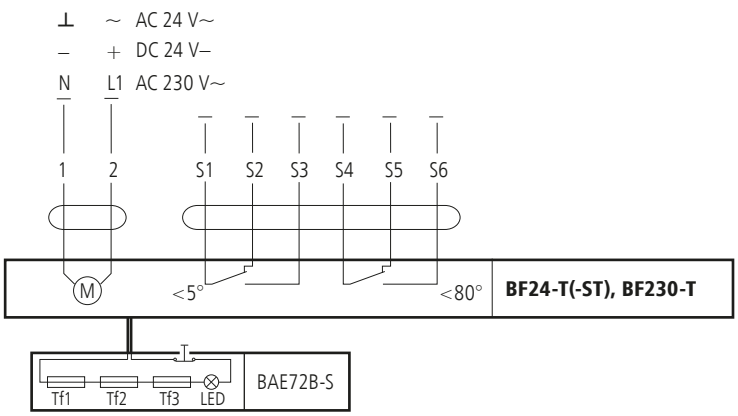

note: 24 V connection through a safety transformer.

To disconnect the 230 V actuator from the mains, the gap of at least 3 mm between the contacts (when off) is required in the switch.

It is possible to connect further actuators in parallel. Check the power consumption.

note:

The location of the actuator limit switches is shown for the no voltage position.

electrical diagram of the BF24TL-T(-ST) and BF24TL(-ST) actuator:

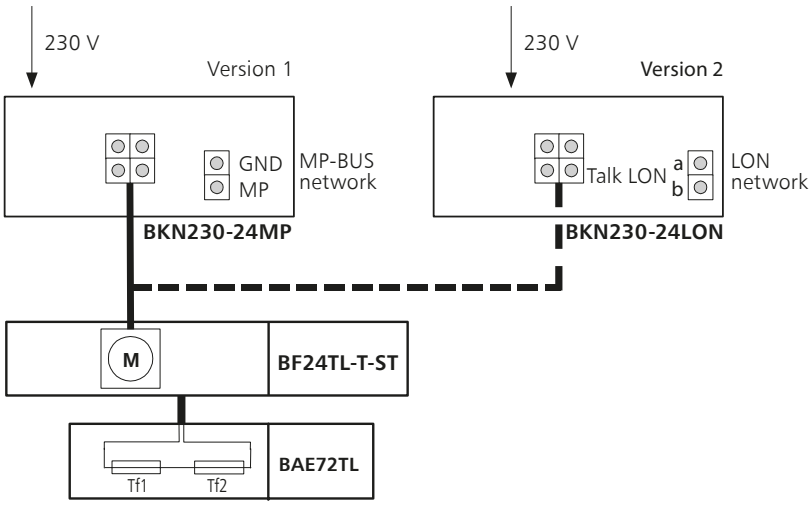

electrical diagram of the BF series actuator:

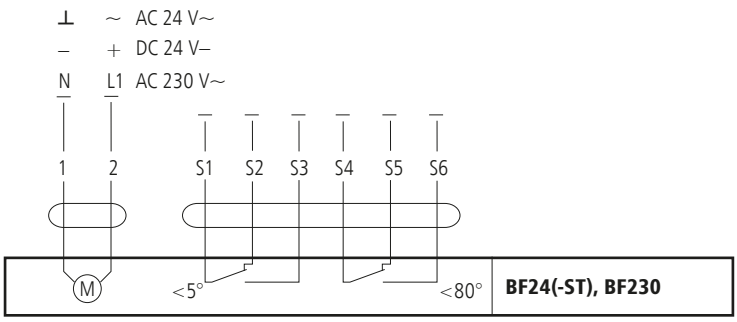

note: 24 V connection through a safety transformer.

To disconnect the 230 V actuator from the mains, the gap of at least 3 mm between the contacts (when off) is required in the switch.

It is possible to connect further actuators in parallel. Check the power consumption.

note:

The location of the actuator limit switches is shown for the no voltage position.

13.2.2. BE, BLE electric actuators

Specifications	BE24, BE24-ST	BE230	BLE24	BLE230
power supply	AC 24 V 50/60 Hz DC 24 V	AC 230 V 50/60 Hz	AC 24 V 50/60 Hz DC 24 V	AC 230 V 50/60 Hz
power demand: - movement time - for holding	12 W 0.5 W	8 W 0.5 W	7.5 W 0.5 W	5 W 0.5 W
sizing (apparent power)	18 VA	15 VA	9 VA	12 VA
protection class	III	II	III	II
ingress protection rating	IP 54	IP 54	IP 54	IP 54
auxiliary circuit breaker:	2 x SPDT 6 (1.5) A AC 250 V	2 x SPDT 6 (1.5) A AC 250 V	2 x EPU 3 (0.5) A 250 V	2 x EPU 3 (0.5) A 250 V~
- activation position	5°, 80°	5°, 80°	5°, 80°	5°, 80°
torque - motor	40 Nm	40 Nm	15 Nm	15 Nm
movement time (0-90°) - motor	< 60 s for 90°	< 60 s for 90°	< 30 s for 90°	< 30 s for 90°
operating temperature range	-30 ... +50°C	-30 ... +50°C	-30 ... +50°C	-30 ... +50°C
sound intensity level	~62 dB (A)	~62 dB (A)	~62 dB (A)	~62 dB (A)

electrical diagram of the BE, BLE series actuator:

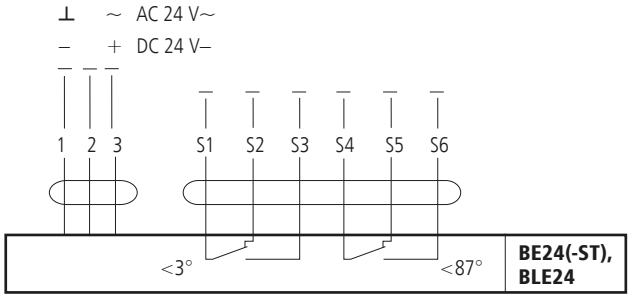

note:

The actuator operation control requires routing three wire system to it. The actuator rotation sense is changed by the application of the power supply voltage to the terminal 2 or 3, depending on the desired direction.

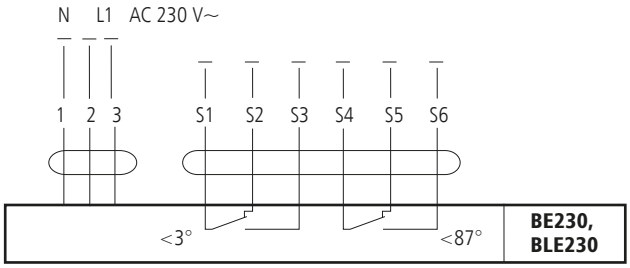

note: 24 V connection through a safety transformer.

To disconnect the 230 V actuator from the mains, the gap of at least 3 mm between the contacts (when off) is required in the switch.

It is possible to connect further actuators in parallel. Check the power consumption.

note:

The location of the actuator limit switches is shown for the no voltage position.

13.2.3. BFL, BFN electric actuators

Specifications	BFL24 (BFL24-T)	BFL230 (BFL230-T)	BFN24 (BFN24-T)	BFN230 (BFN230-T)
power supply	AC 24 V 50/60 Hz DC 24 V	AC 220-240 V 50/60 Hz	AC 24 V 50/60 Hz DC 24 V	AC 220-240 V 50/60 Hz
power demand: - for spring tensioning - for holding	2.5 W 0.7 W	3.5 W 1.1 W	4 W 1.4 W	5 W 2.1 W
sizing (apparent power)	4 VA	6.5 VA	6 VA	10 VA
protection class	III	II	III	II
ingress protection rating	IP 54	IP 54	IP 54	IP 54
auxiliary circuit breaker:	2 x SPDT 3 (0.5) A AC 250 V	2 x SPDT 3 (0.5) A AC 250 V	2 x EPU 3 (0.5) A 250 V	2 x EPU 3 (0.5) A 250 V~
- activation position	5°, 80°	5°, 80°	5°, 80°	5°, 80°
torque: - motor - return spring	4 Nm 3 Nm	4 Nm 3 Nm	9 Nm 7 Nm	9 Nm 7 Nm
cable connection: - motor (length: 0.9 m) - auxiliary circuit breaker	2 x 0.75 mm^2 6 x 0.75 mm^2	2 x 0.75 mm^2 6 x 0.75 mm^2	2 x 0.75 mm^2 6 x 0.75 mm^2	2 x 0.75 mm^2 6 x 0.75 mm^2
movement time (0-90°): - motor - return spring	< 60 s ~20 s	< 60 s ~20 s	< 60 s ~20 s	< 60 s ~20 s
operating temperature range	-30 ... +55°C	-30 ... +55°C	-30 ... +55°C	-30 ... +55°C
sound intensity level: - motor - return spring	max 43 dB (A) ~62 dB (A)	max 43 dB (A) ~62 dB (A)	max 55 dB (A) ~67 dB (A)	max 55 dB (A) ~67 dB (A)

electrical diagram of the BFL...-T, BFN...-T series actuator:

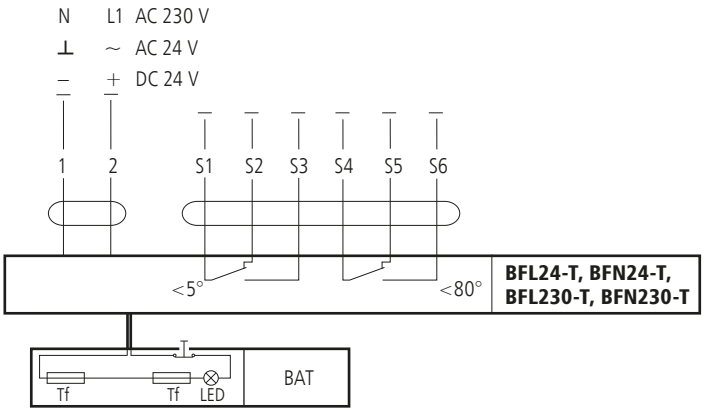

note: 24 V connection through a safety transformer.

To disconnect the 230 V actuator from the mains, the gap of at least 3 mm between the contacts (when off) is required in the switch.

It is possible to connect further actuators in parallel. Check the power consumption.

note:

The location of the actuator limit switches is shown for the no voltage position.

electrical diagram of the BFL, BFN series actuator:

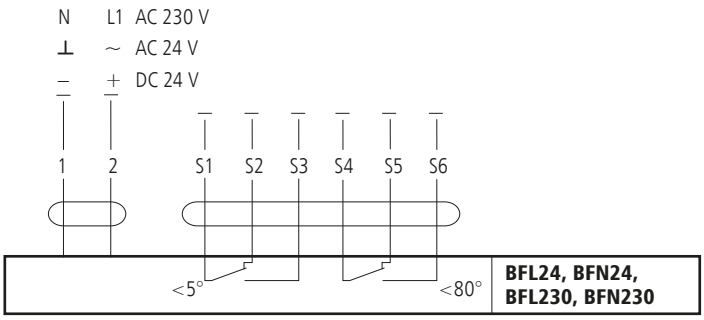

note: 24 V connection through a safety transformer.

To disconnect the 230 V actuator from the mains, the gap of at least 3 mm between the contacts (when off) is required in the switch.

It is possible to connect further actuators in parallel. Check the power consumption.

note:

The location of the actuator limit switches is shown for the no voltage position.

13.2.4. EXBF actuators

Specifications	EXBF B 001 2 ...0 N 000	EXBF A 001 2 ...0 N 000
zone	1, 2, 21, 22	
ATEX classification	II 2 GD EEx d IIC T6	
power supply	24 V AC ±20% 50/60 Hz / 24 V DC -10/+20%	230 V AC ±14% 50/60 Hz
power demand: - for spring tensioning - for holding	 7 W 2 W	 8 W 3 W
sizing (apparent power)	10 VA	11 VA
ingress protection rating	IP 66	IP 66
auxiliary circuit breaker: - activation position	2 x SPDT 6 A (3) max 250 V AC 5°, 80°	2 x SPDT 6 A (3) max 250 V AC 5°, 80°
torque: - motor - return spring	 18 Nm 12 Nm	 18 Nm 12 Nm
movement time (90°C): - motor - return spring	 150 s ~20 s	 150 s ~20 s
ambient temperature	-30 ... +50°C	-30 ... +50°C

connection diagram for EXBF and EXBF...-T actuators:

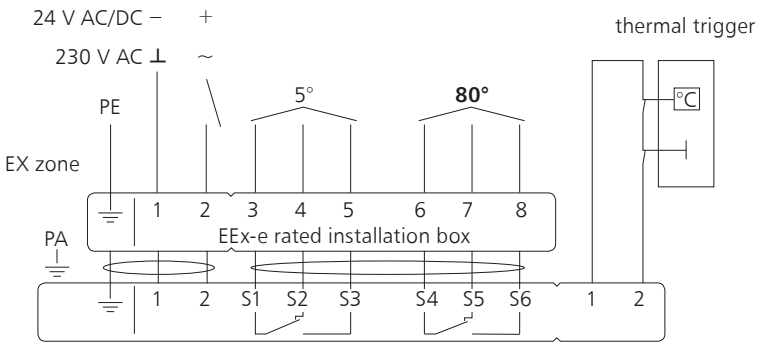

13.3. RST trigger control mechanisms

In the RST version the WK1 limit switches are independent units installed inside the fire damper casing. The thermal trigger is on the damper blade. The driving spring is installed on the damper blade or in a guard box on its casing.

1. moving hook with nut
2. fusible link
3. fixed hook on the damper blade
4. damper blade
5. drive spring

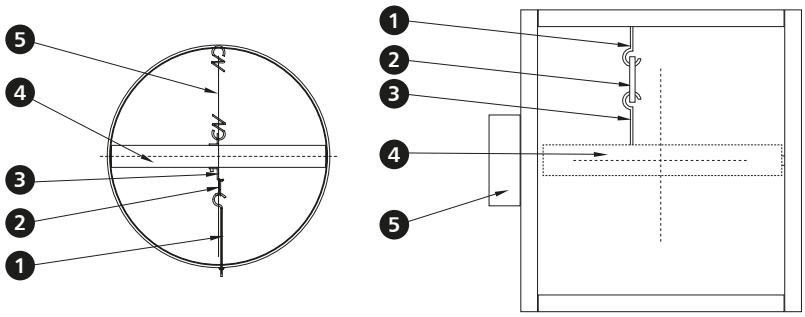

Independent limit switches – RST version

WK1 – limit switch (closed damper blade signal)
WK2 – limit switch (closed/open damper blade signal)

Switch specifications

WK1 and WK2 limit switch	1xNO/1xNC SPDT 5 A, 230 V AC
limit switch operating temperature	-25 ... +85°C
casing	plastic

electric connection diagram of WK1 and WK2 limit switches

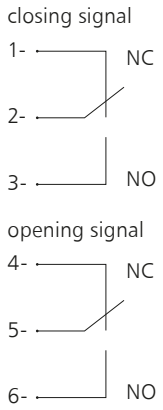

note:
When the damper blade closes, the closed indication limit switch is switched over (contacts 2-3 are closed).

13.4. RST-KW1 mechanisms

Specifications	RST-KW1/S	RST-KW1/S/WK2	RST-KW1/24I	RST-KW1/24P	RST-KW1/230I	RST-KW1/230P
rated voltage	–	–	24 V - 48 V DC	24 V - 48 V DC	230 AC	230 AC
power consumption	–	–	3.5 W	1.6 W	2 W	2 W
thermal trigger	74°C (optionally 95°C)					
connections - trigger	–	–	wire 0.6 m, 2 x 0.5 mm^2			
connections - limit switches	–	wire 0.6 m, 6 x 0.5 mm^2				
limit switch	–	2 x NO/NC 5A, 230 V AC				
movement time	max. 2 s					
mechanism operation control (closing)	–	–	engaging "pulse" voltage	disengaging "break" voltage	engaging "pulse" voltage	disengaging "break" voltage
mechanism operation control (opening)	manual	manual	manual	manual	manual	manual
pulse duration	max. 1 s					

description of electrical connections:

RST-KW1 mechanism power supply	closing limit switch	opening limit switch
wire number: 1-2	wire number: 3-4 – NO type (normally open)	wire number: 6-7 – NO type (normally open)
	wire number: 4-5 – NC type (normally closed)	wire number: 7-8 – NC type (normally closed)

14.1. table for quick selection of walls and their thickness

fire damper	wall type and thickness [mm]			
	light type wall made of gypsum panels on a steel grid	wall made of common bricks or cellular concrete blocks	concrete wall	ceiling
mcr FID S/S c/P	125	115	125	150
mcr FID S/S p/P	125	110	110	150
mcr FID S/S p/O	125	110	110	150
mcr FID S/V p/P	125	110	110	-
mcr FID PRO	125	125	125	150
mcr WIP/S, mcr WIP/T	-	120	120	-
mcr WIP/V	-	110	110	-
mcr WIP/T-G	-	110	110	-
mcr WIP PRO/S	125	120	120	150
mcr WIP PRO/T	125	120	120	-
mcr WIP PRO/V	125	125	125	-
mcr ZIPP	125	110	110	150

14.2. manufacture standards

fire damper	description	standard	option
mcr FID S/S c/P	right damper	X	
	inverse damper		X
	left damper		X
	trigger control mechanism perpendicular to the flow axis	X	
	trigger and control mechanism along the flow axis		X
mcr FID S/S p/P mcr FID S/V p/P	right damper	X	
	inverse damper		X
	left damper		X
	trigger control mechanism perpendicular to the flow axis	X	
	trigger and control mechanism along the flow axis		X
mcr FID S/S p/O	right damper	X	
	inverse damper		
	left damper		
	electric actuator perpendicular to the flow axis	X	
	BF actuator along the flow axis (exception)	X	
	electric actuator along the flow axis		X
	RST, RST-KW1 mechanism along the flow axis	X	
mcr FID PRO	right damper	X	
	inverse damper		
	left damper		
	electric actuator normal to the flow axis	X	
	electric actuator along the flow axis		X
	RST-KW1 mechanism along the flow axis	X	
mcr WIP	right damper		X
	inverse damper		X
	left damper	X	
	trigger control mechanism perpendicular to the flow axis	X	
	trigger and control mechanism along the flow axis		
mcr WIP PRO	right damper		X
	inverse damper		X
	left damper	X	
	trigger control mechanism perpendicular to the flow axis	X	
	trigger and control mechanism along the flow axis		

mcr FID S/S C/P damper

right damper standard

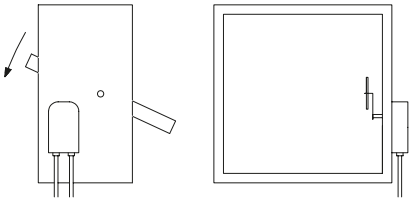

inverse damper
(wires downward)

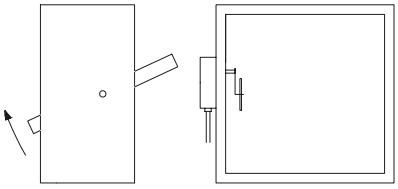

left damper

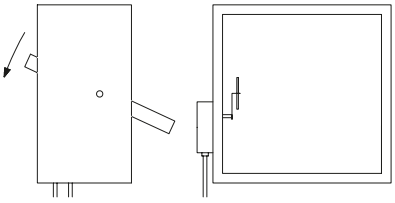

mcr FID S/S p/P, mcr FID S/S p/O, mcr FID S/V p/P dampers

right damper standard

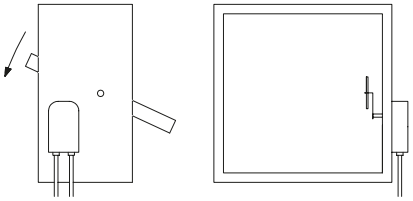

inverse damper
(wires downward)

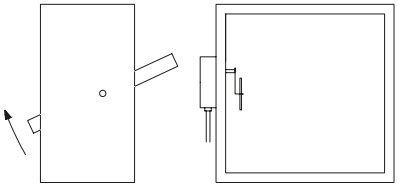

left damper

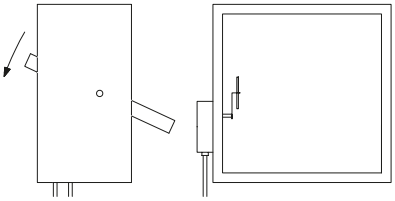

mcr FID PRO/S, mcr FID S/S p/O dampers

right damper standard

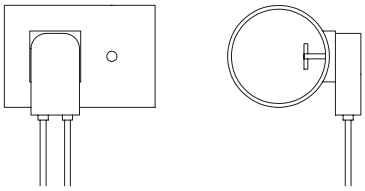

actuator along the flow axis

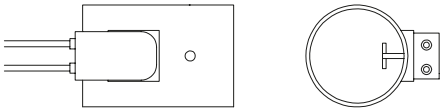

mcr WIP/S, mcr WIP/V, mcr WIP/V-M, mcr WIP/T, mcr WIP/T-G dampers

standard left damper

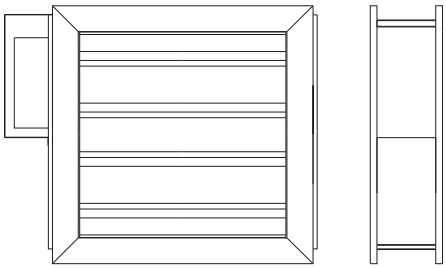

right damper

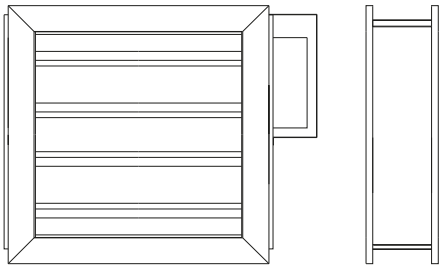

reverse mounting possible

mcr WIP PRO/S, mcr WIP PRO/T, mcr WIP PRO/V, mcr WIP PRO/V-M dampers with an actuator

standard left damper

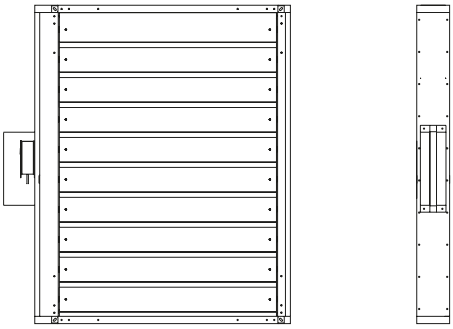

right damper

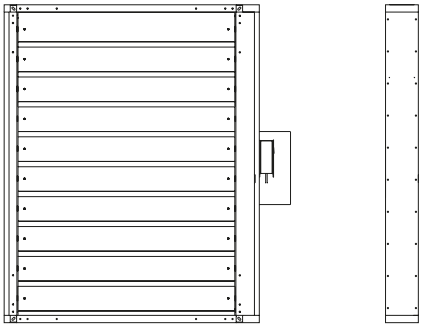

installation in reversed horizontal and vertical position available

mcr WIP PRO/S, mcr WIP PRO/T dampers with RST-KW1 mechanism

standard left damper

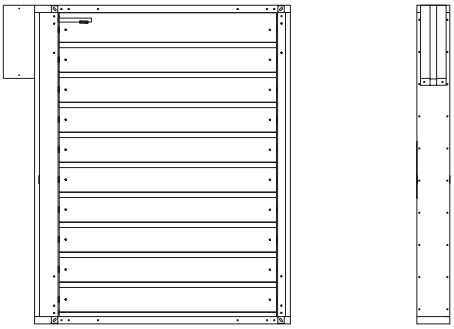

right damper

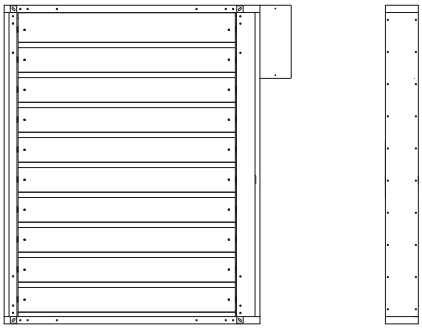

installation in reversed horizontal and vertical position available

14.3. installation distances

14.3.1. rectangular fire dampers

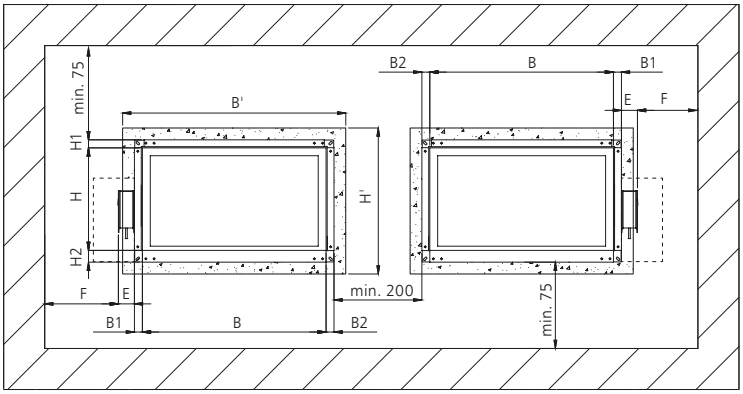

B, H - damper nominal dimensions
B', H' - installation opening dimensions
H1, H2, B1, B2 - dimensions of connection flanges
E - dimension of the final control plane from the nominal dimension
F - distance from the building envelope element to the control plane

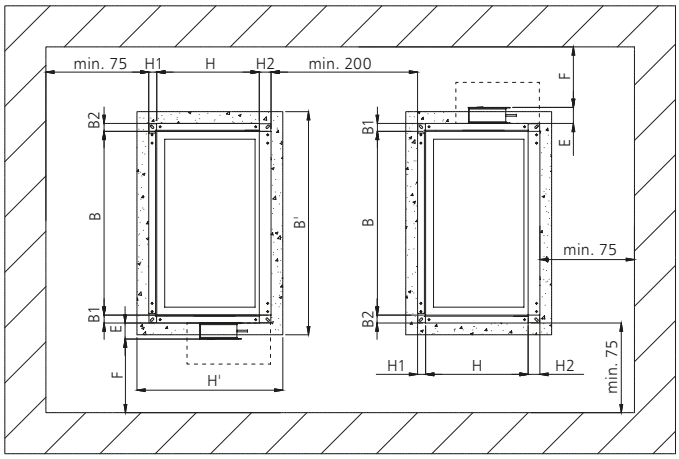

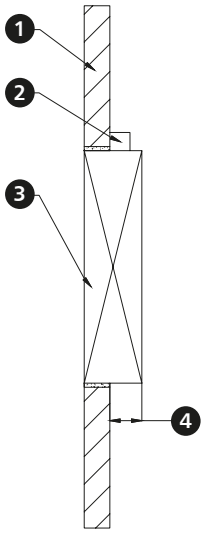

B, H - damper nominal dimensions
B', H' - installation opening dimensions
H1, H2, B1, B2 - dimensions of connection flanges
E - dimension of the final control plane from the nominal dimension
F - distance from the building envelope element to the control plane

1. fire partition wall
2. damper control
3. fire damper
4. embedding border dimension

fire damper	trigger control mechanism	embedding border	B1	B2	H1	H2	F	E	B'	H'
mcr FID S/S c/P	BFN	141	30	30	30	30	75	57	B+90	H+90
	BFL						75	53		
	BF24TL-ST						75	65		
	EXBF						75	175		
	RST	130					75	70		
	RST-KW1	141					75	80		
mcr FID S/S p/P mcr FID S/V p/P	BFN	135	25	25	25	45	75	62	B+90	H+90
	BFL						75	58		
	BF24TL-ST						75	70		
	EXBF						75	175		
	BF						75	70		
	RST	133					75	75		
	RST-KW1	138					75	85		
	BE	153					75	175		
	BLE						75	145		
mcr WIP	BFN	symmetrically	60	60	50	50	75	125	B+325	H+180
	BFL						75	125	B+325	
	BF						75	125	B+325	
	BF24TL-ST						75	125	B+325	
	EXBF						75	175	B+375	
	RST-KW1						75	165	B+365	
	BLE						75	125	B+325	
	BE						75	125	B+325	
mcr WIP PRO	BFN	symmetrically	70	50	30	30	75	120	B+280	H+100
	BFL						75	120		
	BF						75	120		
	BF24TL-ST						75	120		
	EXBF						75	175		
	RST-KW1						75	120		
	BLE						75	120		
	BE							120		

14.3.2. round fire dampers

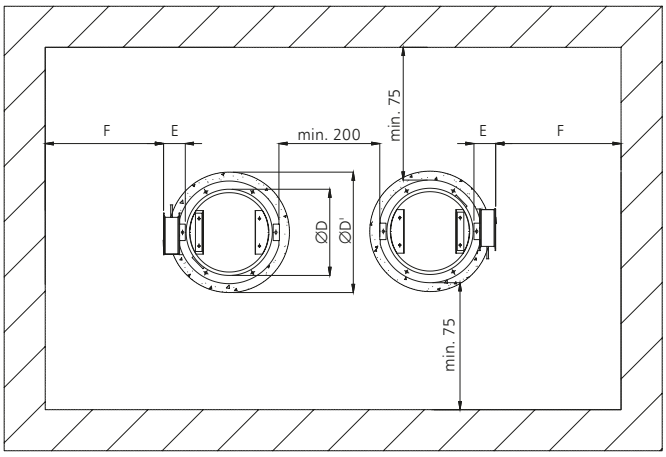

D - damper nominal dimensions
D' - installation opening dimension
E - dimension of the final control plane from the nominal dimension
F - distance from the building envelope element to the control plane

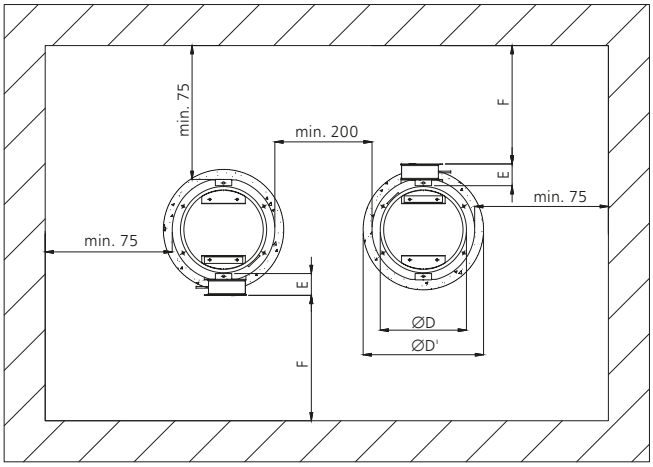

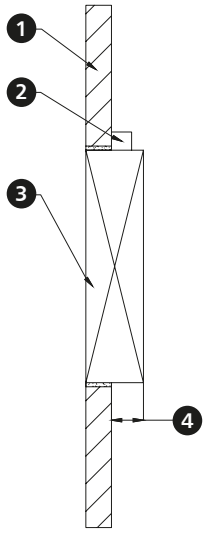

1. fire partition wall
2. damper control
3. fire damper
4. embedding border dimension

fire damper	trigger control mechanism	versions	embedding border	F	E	D
mcr FID S/S p/O	BFN	-	123	D+90	67	75
	BFL				63	75
	BF24TL-ST				75	75
	EXBF				185	75
	BF				75	75
	RST		128		80	75
	RST-KW1		124		90	75
mcr FID PRO	BFL	male connection (nipple)	147	D+40	74	75
		female connection (muff)	152			
	BF24TL-ST	male connection (nipple)	147		85	75
		female connection (muff)	152			
	EXBF	male connection (nipple)	147		190	75
		female connection (muff)	152			
	RST	male connection (nipple)	symmetrically		-	75
		female connection (muff)	symmetrically			
	RST-KW1	male connection (nipple)	symmetrically		85	75
		female connection (muff)	symmetrically			
mcr ZIPP	-	-		D+40	-	75